ROHS

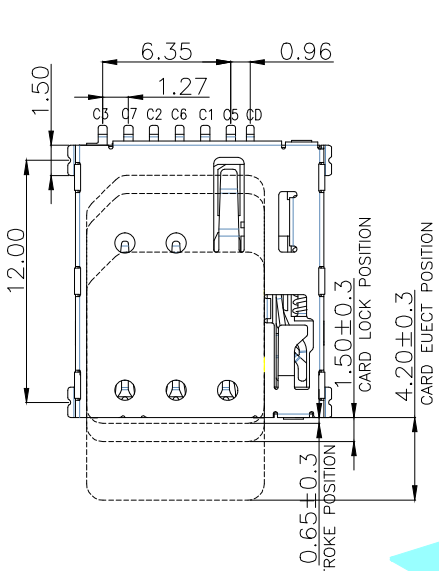

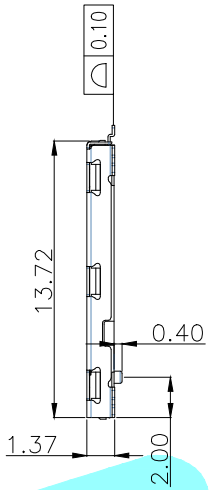

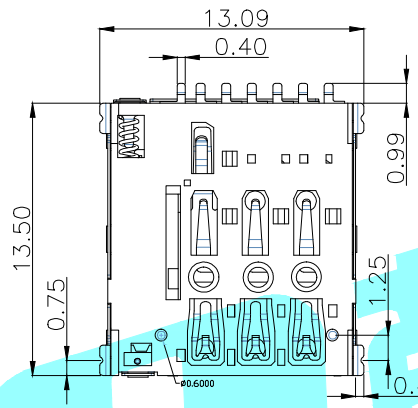

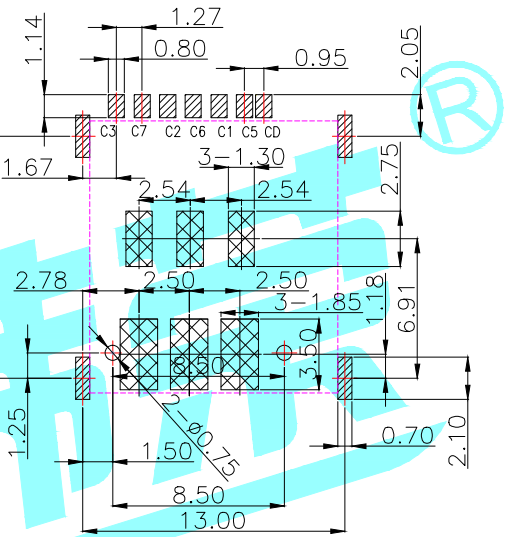

RECOMMENDED PCB LAYOUT
GENERAL TOLERANCE ±0.05

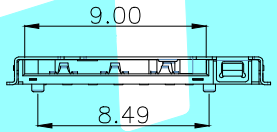

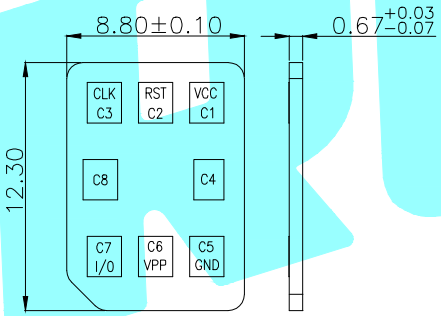

NANO SIM CARD

NOTES:
1. ELECTRICAL CHARACTERISTICS
   1-1. CONTACT RESISTANCE: 100 Milliohms Max
   1-2. INSULATION RESISTANCE: 1,000 Megohms Min.
   1-3. VOLTAGE RATING: 30V.
   1-4. CURRENT RATING: 1.0A.
2. MECHANICAL CHARACTERISTICS
   2-1. OPERATION TEMPERATURE RANGE: -20°C~+85°C
   2-2. DURABILITY: 5000 CYCLES

SIM CARD	
Pin No.	NAME
C1	VCC
C2	RST
C3	CLK
C5	GND
C6	VPP
C7	I/O

CRICUIT DIAGRAM FOR CARD DETECT SWITCH	
CARD DETECT SWITCH (CD)	NORMAL.....SHORT
GND	INSERTING CARD.....OPEN

ITEM	PART NAME	TER'NO.	QTY.	MATERIAL	FINISHING	REMARK
③	Shell	——	1	SUS	Ni Plated	——
②	Terminal	——	6	Phosphor Bronze	Au Plated	——
①	Housing	——	1	LCP	Black	——

APPROVALS		DATE	HRO韩荣® ELECTRONICS CO.,LTD	
DRAWN	LIUCAN	2021.10.7		
CHECKED			TITLE:	SIM
APPROVALS			PART NO.	SIM-13A
TOLERANCES ARE: 30~以上 ±0.30; 10~30 ±0.25; 5~10 ±0.20; ~5 ±0.15	ANGLE ±2°		UNIT: mm	SCALE: 1:1
			DRAWING NO.	——
			PROJ:	SHEET 1 OF 1

ECN NO.	REV.	DATE.	DESCRIPTION.	CHANGE.	CHECK.	APPRO.
——	A	——	NEW	——	——	——