Jul.1.2024 Copyright 2024 HIROSE ELECTRIC CO., LTD. All Rights Reserved.
In case of consideration for using Automotive equipment / device which demand high reliability, kindly contact our sales window correspondents.

	COUNT	DESCRIPTION OF REVISIONS	BY	CHKD	DATE		COUNT	DESCRIPTION OF REVISIONS	BY	CHKD	DATE
1	1	RE-T-00705	K.N	M.O	'02.4.9						. .
					. .						. .
					. .						. .

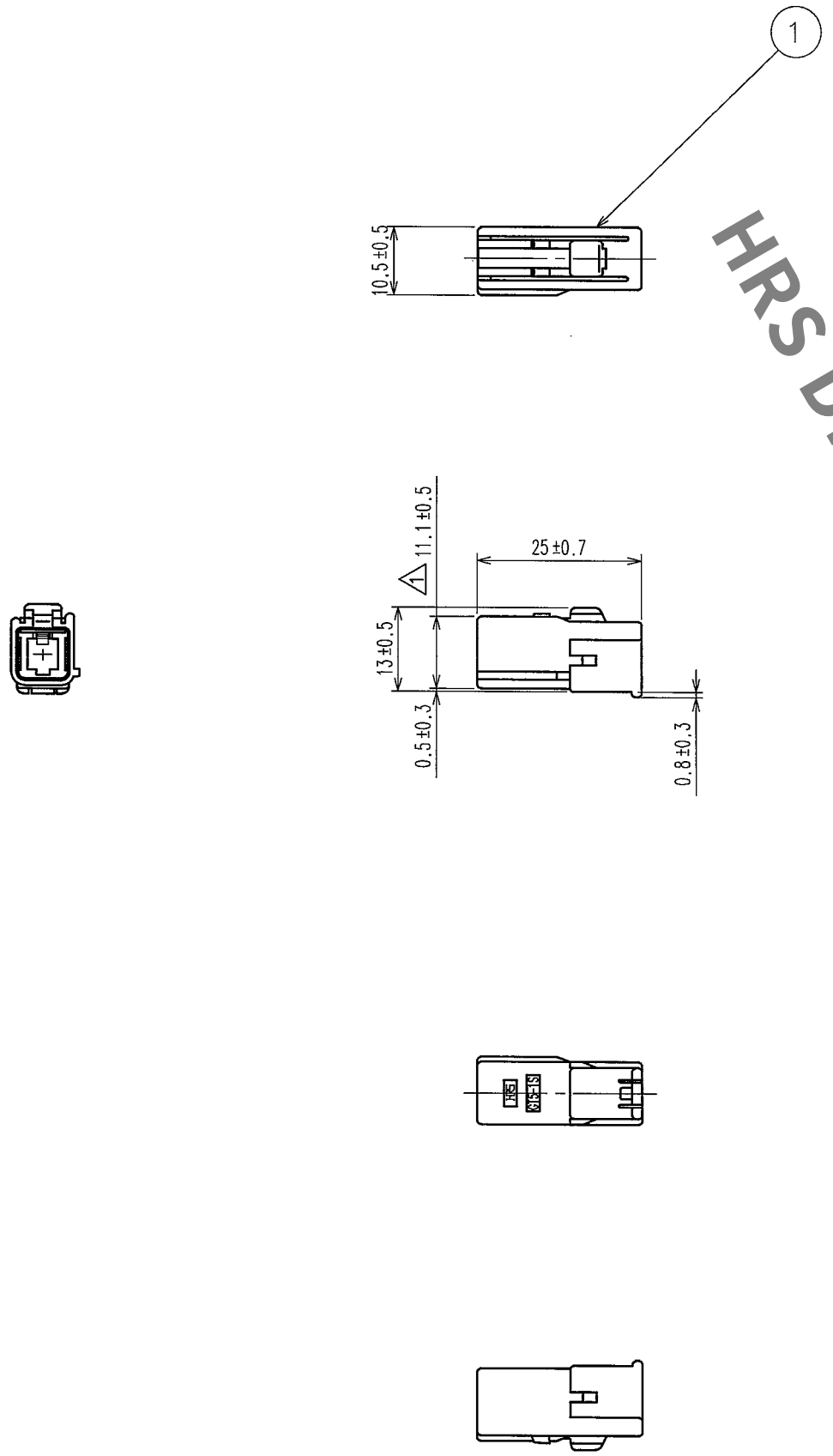

NOTE1. THIS CONNECTOR SHALL BE USED WITH A RETAINER (CL755-0006-2).

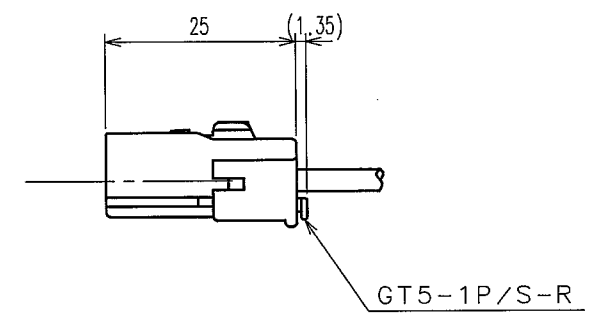

CONNECTOR ASSEMBLED WITH A RETAINER

HRS DRAWING FOR REFERENCE

NO.	MATERIAL	FINISH, REMARKS	NO.	MATERIAL	FINISH, REMARKS
2			4		
1	PBT	SIGNAL BLUE	3		

CODE NO.(OLD)	DRAWN	DESIGNED	CHECKED	APPROVED	RELEASED
	K.NEI 02.2.16	K.NEI 02.2.16	M.OKADA 02.2.16	K.SATO 02.2.16	. .

SCALE 1 : 1
UNITS mm

DRAWING NO. EDC3-165586

HRS HIROSE ELECTRIC CO., LTD

PART NO. GT5-1S-HU(C)

CODE NO. CL755-0080-5

1/1

FORM NO.229

TO