Product NO.	DOSIN-801-0081(左右)			
REV	DESCRIPTION	DWN	DATE	APPROVEN
A	First issue	JIM	2012/11/02	John kine
B	Size 29.5mm changed to 29.2mm, 14 changed to 13.5	Gavin	2022/08/09	John kine

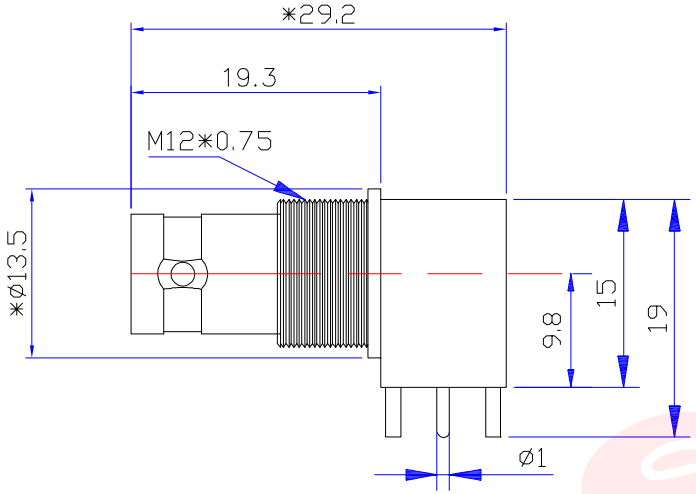

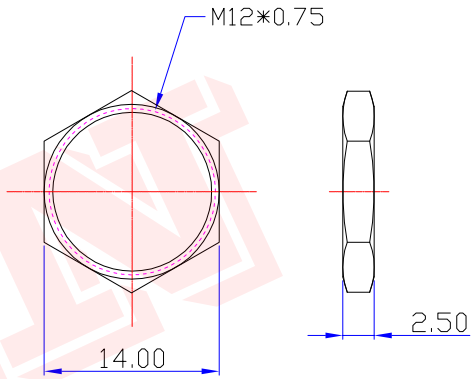

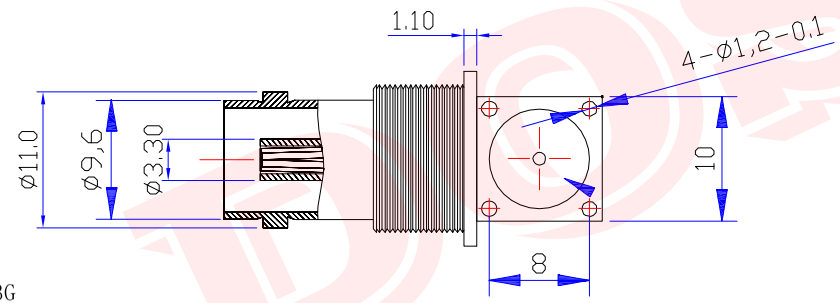

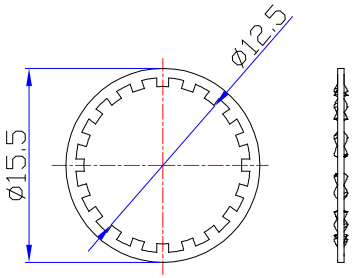

Specifications
Impedance:75 Ohms
Frequency Range:DC~3G
VSWR:1.3MAX
Working Voltage:500V rms @ sea level
Insulation Resistance:5000 MOhms min
Temperature Range:-55℃ TO +155℃
Relative Temperature:≤95%(40° C±2° C)
Drawings products are in line with ROHS standards

NO	DESCRIPTION	MATERIAL	FINISH	QTY
5	Hex Nut	Brass	Nickel	1
4	Washer	TE	Nickel	1
3	Center Contact	Brass	Glod	1
2	Insulator	Teflon	None	1
1	Body	Brass	Nickel	1

Tolerance	0.5 - 8mm ± 0.20mm 8 - 30mm ± 0.25mm 30 -120mm ± 0.30mm
View	
UNIT	MM
SCALE	1:1

DOSIN —RF CONNECTOR
Dosin Industrial(H.K)Co.Ltd
东莞市德索五金电子制品有限公司
Dosin Hardware Electronics Co.,Ltd
dosin2005@dosin-china.com
Web:http://www.china-guan.com
TEL:(0086)769-81153906
FAX:(0086)769-81875836

Name: R/A BNC JACK FOR PCB CONNECTOR			
SIZE A	Product NO. DOSIN-801-0081(左右)		REV B
DateTime 2022/08/09	CAD FILE D/company drawings/BD		SHEET: 1 OF 1