■ RoHS & HF

Kinghelm®

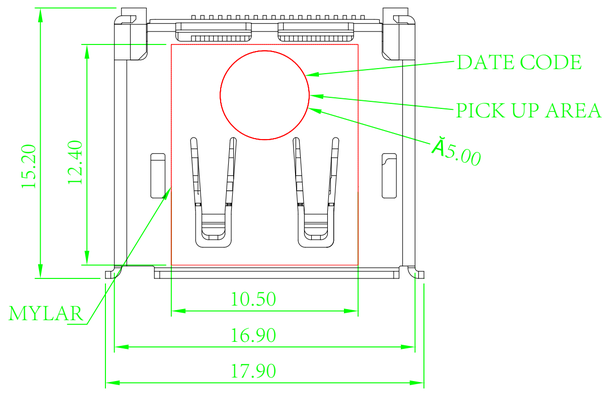

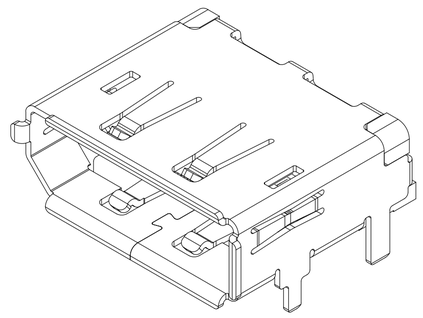

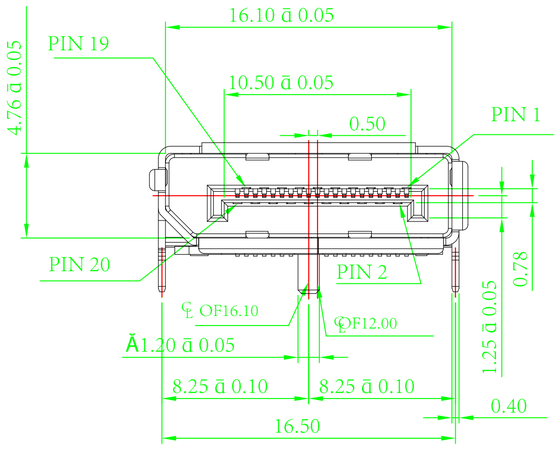

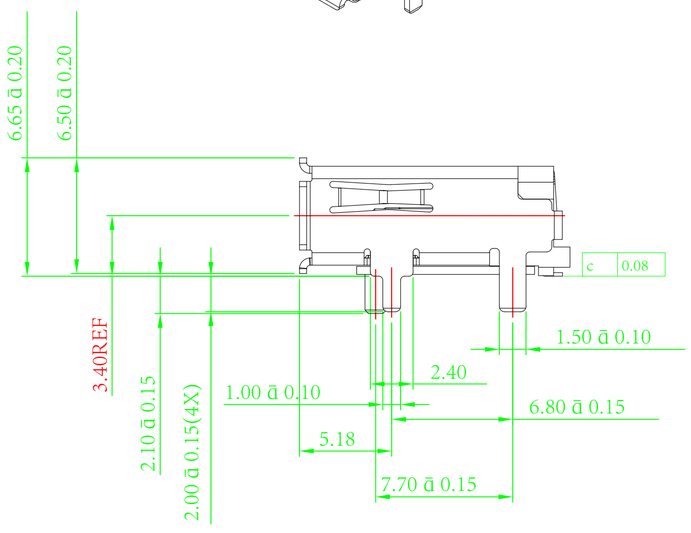

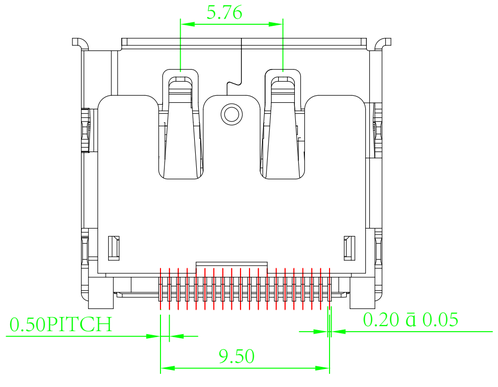

NOTE:

1.MATERIAL:
- 1.1 HOUSING: LCP, UL 94V-0
  - COLOR: BLACK.
- 1.2 CONTACT: C2680, T=0.20mm.
- 1.3 SHIELD: C2680, T=0.40mm.
- 1.4 COVER: LCP,UL 94V-0

2.FINISH:
- 2.1 CONTACT: GOLD PLATING 15U"IN CONTACT AREA,
  - 80u"MIN Tin PLATED IN SOLDER AREA,
  - 50u" MIN. NICKEL UNDERPLATED OVERALL.
- 2.2 SHIELD: 50u" MIN. NICKEL UNDERPLATED OVERALL.

3.MECHANICAL CHARACTERISTICS
- 3.1 RATING CURRENT: 0.5A
- 3.2 RATING VOLTAGE: 40V
- 3.3 CONTACT RESISTANCE: 40 m⊠ MAX
- 3.4 INSULATION RESISTANCE:
  - a, UNMATED: 100M⊠ MIN AT 500 VDC
  - b, MATED: 10M OHMS MIN AT 150 VDC
- 3.5 DIELECTRIC WITHSTANDING VOLTAGE: 500V AC/1MINUTE
- 3.6 DURABILTY: 10000 CYCLES.
- 3.7 MATING FORCE: 4.5KGF MAX.
  - UNMATING FORCE: 1~4 KGF.
- 3.8 OPERATING TEPERATURE: -20ĂC--+85ĂC
- 3.9 STORAGE TEMPERATURE: -20ĂC--+65ĂC

4. NOTES:
- 4.1 ALL COMPONENTS ARE RoHS COMPLIANT.
- 4.2 RESISTANCE TO SOLDERING HEAT: 265° C FOR 10 SECONDS.

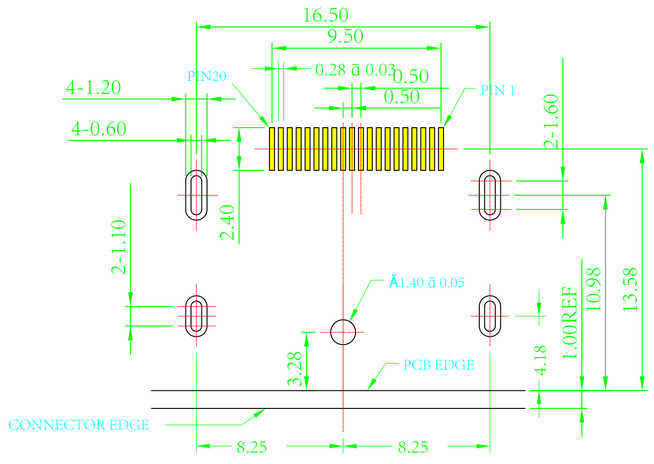

RECOMMENDED P.C.B LAYOUT(PCB THICKNESS: 1.6mm)
COMPONENT SIDE VIEW(TOLERANCE: ±0.05)

TOLERANCE UNSPECIFIED		TITLE: DP SMT 带翻边 塑胶底座			深圳市金航标电子有限公司 SHENZHEN KINGHELM ELECTRONIC TECHNOLOGY CO.,LTD.		
X. XXX	± 0.15						
X. XX	± 0.25	PART NO. KH-DP-2.0JB-SMT			UNIT	DESIGNER	wang
X. X	± 0.35				mm	CHECKED	
X.	± 0.50		SCALE	REV	SHEET	APPROVED	
ANGLE	± 3°		1:1	A	1oF1	DATE	2021.06.01

REV	变更处	变 更 描 述	变更人	日 期
A	- -	NEW	wang	2021.06.01