Semi-rotary drives DRRD, twin pistons

★	Festo Core Range Solves the majority of your automation tasks	With the Festo Core Range, we have selected the most important products and functions from our broad product catalogue, and added the quickest delivery.
Worldwide:	Quickest delivery – wherever, whenever	The Core Range offers you the best value for your automation tasks.
Simply good:	Expected high Festo quality	
Fast:	Easy and fast to select	

Just look for the star!

Characteristics

At a glance

- Rack and pinion principle
- Very high accuracy in the end positions
- Very high load bearing capacity
- Very good axial run-out at the flange shaft
- High mass moments of inertia
- Low backlash and good dynamic response
- Splash-proof design to IP65 based on EN 60529
- Defined interfaces
- Supply port at one end
- Choice of mounting options
- Ideal for use in handling applications

Wide choice of variants

Flange shaft

- Size: 8 ... 63
- Torque: 0.2 ... 112 Nm
- Swivel angle: 0 ... 180°

Drive shaft

- Size: 12 ... 40
- Torque: 0.8 ... 24.1 Nm
- Swivel angle: 0 ... 180°
- Suitable for ATEX
- Can be ordered as an accessory

Position sensing

- Size: 8 ... 12
  - C-slot for proximity switch SMT/SME-10
- Size: 16 ... 63
  - T-slot for proximity switch SMT/SME-8

External position sensing (sensor mounting)

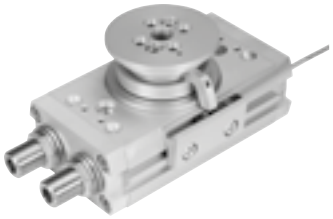

- Size: 16 ... 63
- Position sensing possible directly at the flange shaft
- Inductive proximity switches SIES can be used in combination with external position sensing

Cushioning

- Size: 12 ... 63
- Five cushioning types available:
  - Elastic cushioning with metal end position (P)
  - Shock absorber (Y9)
  - Shock absorber, hard (Y10)
  - Shock absorber, external (Y12)
  - Shock absorber, soft (Y14)

External cushioning

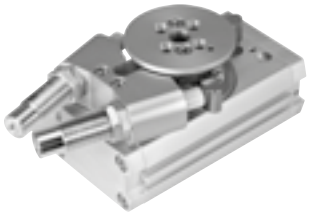

- Size: 12 ... 63
- The full torque can be realised in the end positions in combination with external cushioning

Characteristics

Energy through-feed

- Size: 16 ... 63
- The energy through-feed can be used to transfer electrical signals or compressed air through the hollow shaft. This enables fast and easy supply of the parts connected to the flange (e.g. gripper)

Also suitable for IO-Link signal data transfer.

Intermediate position

- Size: 16 ... 50
- The semi-rotary drive can additionally be positioned at 90° using the intermediate-position module
- The intermediate position can be approached from both directions
- The cushioning for the intermediate position corresponds to the cushioning for the basic drive. Except in the case of cushioning Y12, when shock absorbers Y9 are used

End-position locking

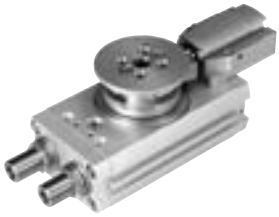

- Size: 16 ... 63
- Mechanical lock in the end positions to prevent unwanted movement in unpressurised condition

Mounting options

Via through-holes

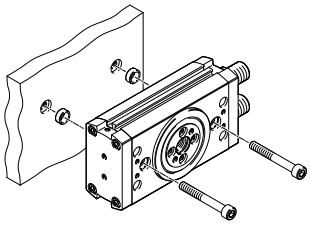

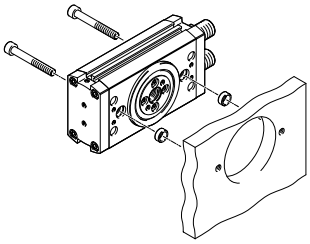

Via thread in the housing profile

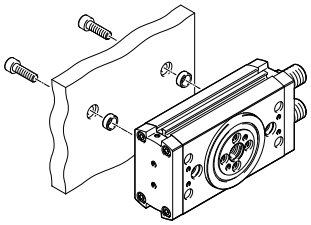

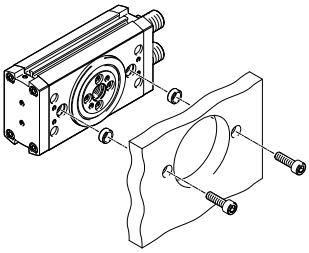

Product range overview

Function	Version	Size	Swivel angle	Energy through-feed					
			[°]	P2	P2E2	P4	P4E6	P8	P8E8
Double-acting	DRRD-8 ... 12								
	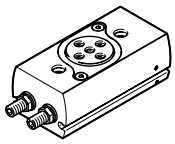	8	Max. 200	–	–	–	–	–	–
		10	Max. 200	–	–	–	–	–	–
		12	Max. 200	–	–	–	–	–	–
	DRRD-16 ... 63								
	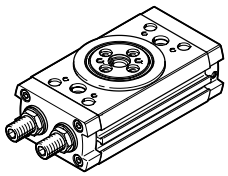	16	Max. 200	■	■	–	–	–	–
		20	Max. 200	■	■	–	–	–	–
		25	Max. 200	–	–	■	■	–	–
		32	Max. 200	–	–	■	■	–	–
		35	Max. 200	–	–	■	■	–	–
		40	Max. 200	–	–	–	–	■	■
		50	Max. 200	–	–	–	–	■	■
		63	Max. 200	–	–	–	–	■	■

Product options

Energy through-feed

P2 Pneumatic, 2 ducts
P2E2 Pneumatic, 2 ducts; electric, 2 signals
P4 Pneumatic, 4 ducts
P4E6 Pneumatic, 4 ducts; electric, 6 signals
P8 Pneumatic, 8 ducts
P8E8 Pneumatic, 8 ducts; electric, 8 signals

Product range overview

Function	Size	Cushioning					Position sensing	EU certification	Intermediate position	End-position locking	External sensor mounting	Splash-proof design	➔ Page/ Internet
		P	Y9	Y10	Y12	Y14	A	EX4	PS1	E1	R	SG	
Double-acting	**DRRD-8 ... 12**												
	8	■	–	–	–	–	■	–	–	–	–	–	6
	10	■	–	–	–	–	■	–	–	–	–	–	
	12	■	■	–	■	–	■	–	–	–	–	–	
	DRRD-16 ... 63												
	16	■	■	–	■	■	■	■	■	■	■	■	20
	20	■	■	–	■	■	■	■	■	■	■	■	
	25	■	■	■	■	■	■	■	■	■	■	■	
	32	■	■	–	■	■	■	■	■	■	■	■	
	35	■	■	■	■	■	■	■	■	■	■	■	
	40	■	■	■	■	■	■	■	■	■	■	■	
	50	–	■	■	■	–	■	■	■	■	■	■	
	63	–	■	■	■	–	■	■	–	■	■	■	

Product options

Cushioning

P Elastic cushioning at both ends
Y9 Linear shock absorber, self-adjusting at both ends, internal
Y10 Linear shock absorber, self-adjusting at both ends, hard, internal
Y12 Linear shock absorber, self-adjusting at both ends, external
Y14 Linear shock absorber, self-adjusting at both ends, soft, internal

System example

System product for handling and assembly technology

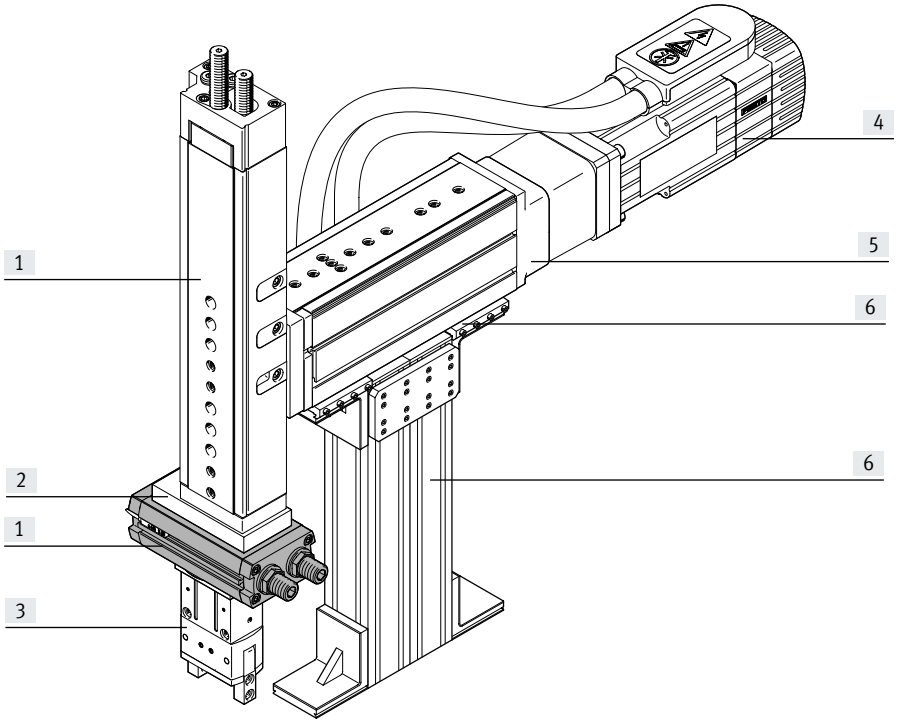

System components and accessories

		Description	➔ Page/Internet
[1]	Drives	Wide range of combinations possible within handling and assembly technology	drive
[2]	Adapters	For drive/drive and drive/gripper connections	adapter-kit
[3]	Gripper	Wide range of variation options within handling and assembly technology	gripper
[4]	Motors	Servo and stepper motors, with or without gear unit	motor
[5]	Axes	Wide range of combinations possible within handling and assembly technology	axis
[6]	Basic components	Profiles and profile connections as well as profile/drive connections	basic component
–	Installation components	For a clear, safe layout of electrical cables and tubing	Installation component

Type codes

001	Series	
DRRD	Semi-rotary drive, double piston	

002	Size	
8	8	
10	10	
12	12	
16	16	
20	20	
25	25	
32	32	
35	35	
40	40	
50	50	
63	63	

003	Nominal swivel angle [°]	
180	180	

004	Output shaft	
FH	Flanged shaft, hollow	

005	Energy through-feed	
	None	
P2	Pneumatic, 2 ducts	
P2E2	Pneumatic, 2 ducts and electric, 2 signals	
P4	Pneumatic, 4 ducts	
P4E6	Pneumatic, 4 ducts and electric, 6 signals	
P8	Pneumatic, 8 ducts	
P8E8	Pneumatic, 8 ducts and electrical, 8 signals	

006	Cushioning	
P	Elastic cushioning rings/plates on both sides	
Y9	Shock absorber, self-adjusting, linear, at both ends	
Y10	Shock absorber, self-adjusting, linear at both ends, hard	
Y12	Shock absorber, self-adjusting, linear at both ends, external	
Y14	Shock absorber, self-adjusting, linear on both sides, soft	

007	Position sensing	
A	For proximity sensor	

008	EU certification	
	None	
EX4	II 2GD	

009	Intermediate position	
	None	
PS1	1 intermediate position	

010	End-position locking	
	None	
E1	Both sides	

011	Sensor mounting, external	
	None	
R	Mounting rail for sensors	

012	Version	
	Standard	
SG	Protected against splash water	

013	Operating instructions	
	With operating instructions	
DN	Without operating instructions	

Peripherals overview

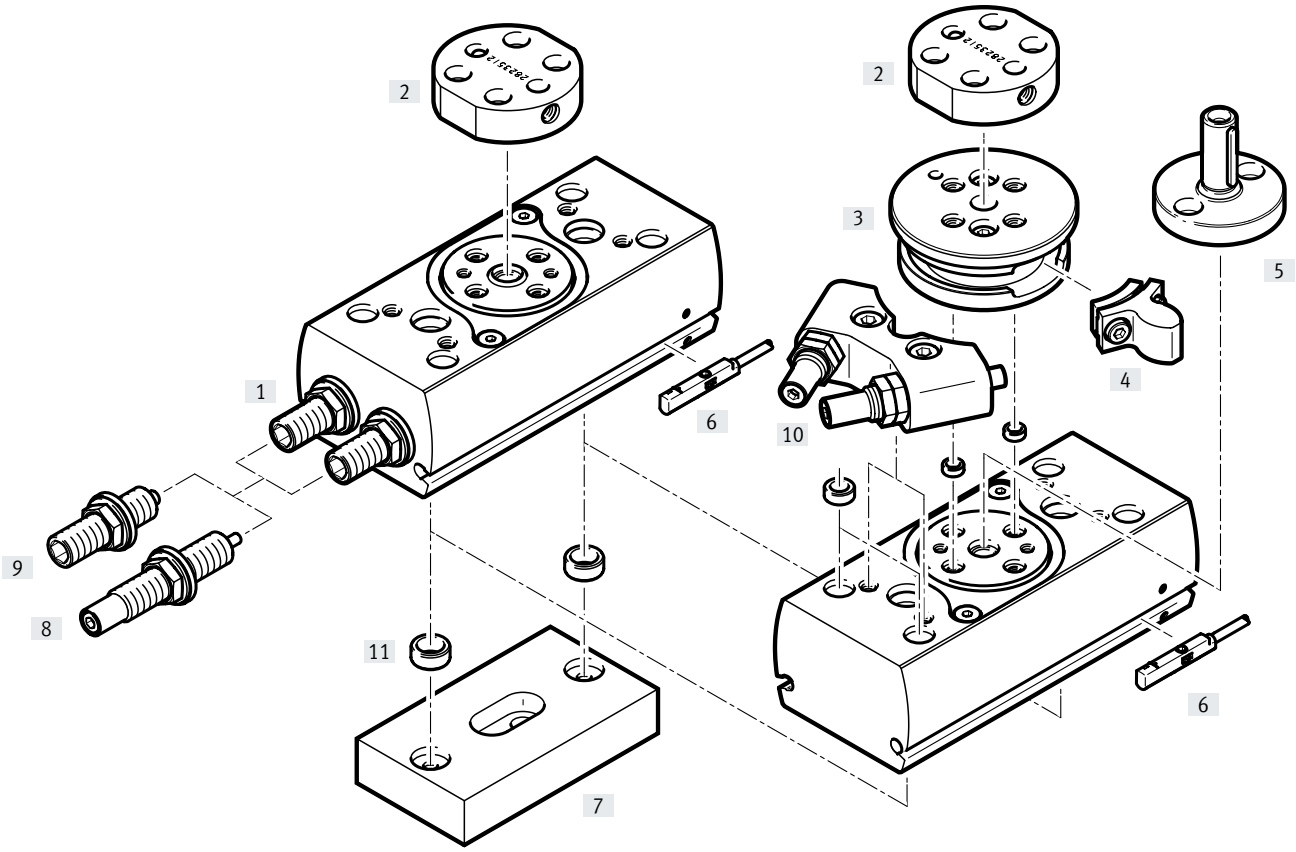

Peripherals overview

Variants, mounting components and accessories		Description	Size			→ Page/ Internet
			8	10	12	
[1]	Semi-rotary drive DRRD	Double-acting	■	■	■	6
[2]	Adapter kit DHAA	• Connecting plate between semi-rotary drive and gripper • Included in the scope of delivery: 2 centring sleeves and screws	■	■	■	gripper
[3]	Flange module	• Required for mounting the component [4]	–	–	■	18
[4]	Stop element	• Serves as an end stop in combination with external shock absorbers (Y12) • Two stop elements are included in the scope of delivery of external shock absorbers (Y12)	–	–	■	18
[5]	Drive shaft DARF-Q11	• The interface corresponds with that of semi-rotary drive DRQD • The drive shaft should only be mounted directly onto the flange shaft • Suitable for ATEX	–	–	■	56
[6]	Proximity switch SMT/SME-10	For sensing the piston position	■	■	■	61
[7]	Adapter kit DHAA	Connecting plate between semi-rotary drive and drive	■	■	■	66
[8]	Shock absorber Y9	Linear shock absorber, self-adjusting at both ends	–	–	■	19
[9]	Shock absorber P	Elastic cushioning elements with metal end position, at both ends	■	■	■	19
[10]	Shock absorber, external Y12	• Linear shock absorber, self-adjusting at both ends, external • Included in the scope of delivery: [3], 2x [4], [10]	–	–	■	19
[11]	Centring sleeve ZBH	For centring attachments (two centring sleeves for mounting the semi-rotary drive included in the scope of delivery)	■	■	■	60

Data sheet

Function

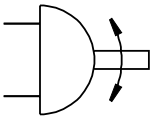

Diameter
8 ... 12 mm

Torque
0.2 ... 0.8 Nm

www.festo.com

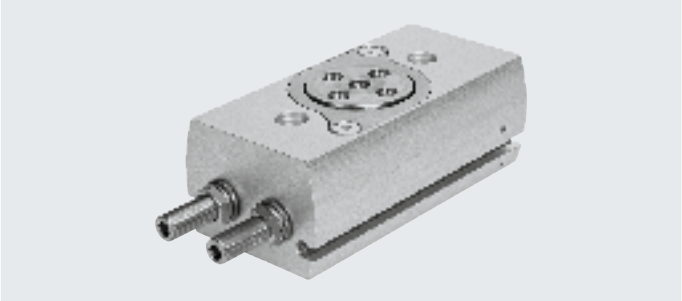

General technical data				
Size		8	10	12
Design		Gear rack/pinion		
Mode of operation		Double-acting		
Pneumatic connection		M3	M3	M5
Type of mounting		With through-hole		
		Via female thread		
Swivel angle	[°]	180 (➔ page 10)		
Cushioning with fixed stop				
DRRD-...-P		Elastic cushioning at both ends		
DRRD-...-Y9		–		Linear shock absorber, self-adjusting at both ends
DRRD-...-Y12		–		External linear shock absorber, self-adjusting at both ends
Repetition accuracy	[°]	≤ 0.03		
Axial run-out[1)]	[mm]	≤ 0.02		
Max. axial load (static)				
Pulling	[N]	260	260	330
Pushing	[N]	700	1100	1400
Mounting position		Any		

1) Axial run-out in new condition

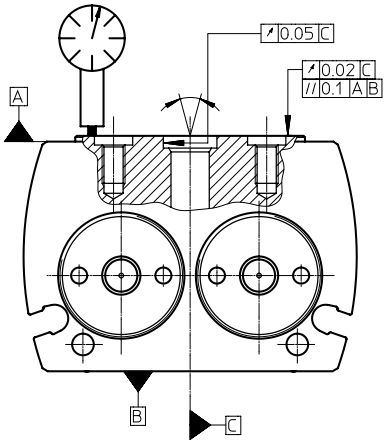

Data sheet

Operating and environmental conditions		
Operating medium		Compressed air to ISO 8573-1:2010 [7:4:4]
Note on operating/pilot medium		Lubricated operation possible (in which case lubricated operation will always be required)
Operating pressure		
DRRD-...-P	[MPa]	0.3 ... 0.8
	[bar]	3 ... 8
	[psi]	43.5 ... 116
DRRD-...-Y9/-Y12	[MPa]	0.2 ... 1
	[bar]	2 ... 10
	[psi]	29 ... 145
Ambient temperature	[°C]	–10 ... +60
Storage temperature	[°C]	–20 ... +60

Weights [g]			
Size	8	10	12
DRRD-...-P	155	245	380
DRRD-...-Y9	–	–	385
DRRD-...-Y12	–	–	500

Forces and torques				
Size		8	10	12
Theoretical torque 0.6 MPa (6 bar, 87 psi)	[Nm]	0.2	0.4	0.8
Max. permissible mass moment of inertia				
DRRD-...-P	[kgcm²]	15	20	80
DRRD-...-Y9	[kgcm²]	–	–	300
DRRD-...-Y12	[kgcm²]	–	–	300

Note

If, in the end positions, a torque which exceeds 50% of the theoretical torque acts against the direction of rotation, no exact end position is guaranteed.
This can be avoided by using external shock absorbers (Y12) or a semi-rotary drive with double the torque.

Materials

Sectional view

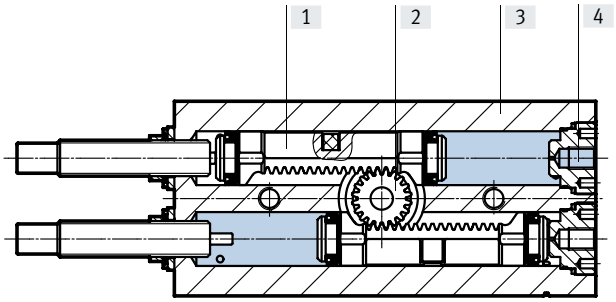

Semi-rotary drive		
[1]	Piston	Copper base alloy
[2]	Flange shaft	High-alloy stainless steel
[3]	Housing	Smooth-anodised wrought aluminium alloy
[4]	Port plug	High-alloy stainless steel
	Seals	NBR
	Piston seal	TPE-U(PU)
	Note on materials	RoHS-compliant
		Contains paint-wetting impairment substances
	PWIS conformity	VDMA24364 zone III

Data sheet

Swivel angle

Fundamentally, the following applies:
Swivel angle α ≥ cushioning angle β
Swivel angle α= 180° + $\Delta\alpha_{right}$ + $\Delta\alpha_{left}$

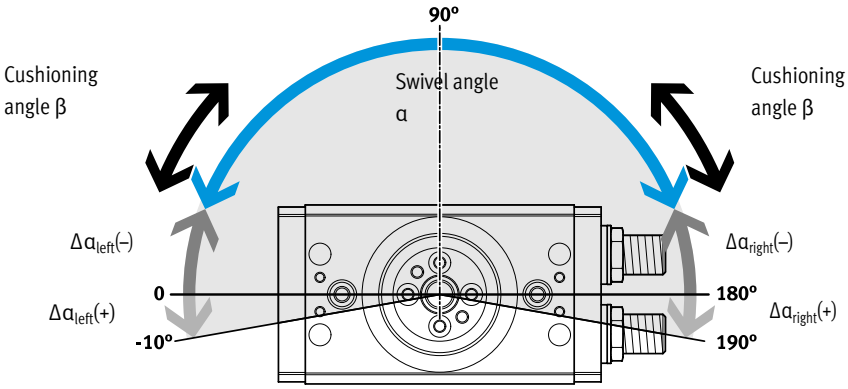

Size		8	10	12
Swivel angle α	[°]	180		
Min. swivel angle α[1]				
DRRD-...-P	[°]	38	37	32
DRRD-...-Y9	[°]	–	–	48
DRRD-...-Y12	[°]	–	–	20
Max. swivel angle α				
DRRD-...	[°]	200		
DRRD-...-Y12	[°]	–	–	192
Swivel angle adjustment α per side (infinitely adjustable)				
DRRD-...-P	[°]	–100 … +10		
DRRD-...-Y9	[°]	≥ –100 … +10		
DRRD-...-Y12	[°]	–	–	–92 … +6
Cushioning angle α				
DRRD-...-P	[°]	38	37	32
DRRD-...-Y9	[°]	–	–	48
DRRD-...-Y12	[°]	–	–	10

1) It is possible to set smaller swivel angles. However, this reduces the cushioning energy.

Swivel angle adjustment

Clockwise direction of rotation:
- Swivel angle decreases

Anticlockwise direction of rotation:
- Swivel angle increases

The swivel angle is adjusted via the cushioning elements using an Allen key. Any reduction in the swivel angle should preferably be evenly split between the two end positions.

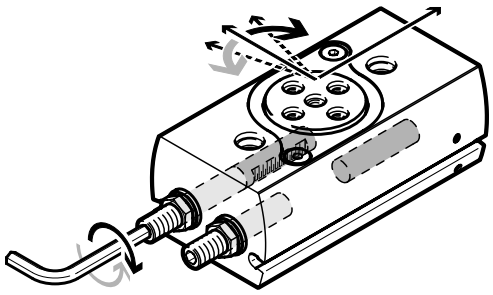

Data sheet

Max. permissible mass moment of inertia J at the flange shaft as a function of swivel time t
(at room temperature and an operating pressure of 6 bar)

Size 8 with cushioning P
Swivel angle 90°/180°

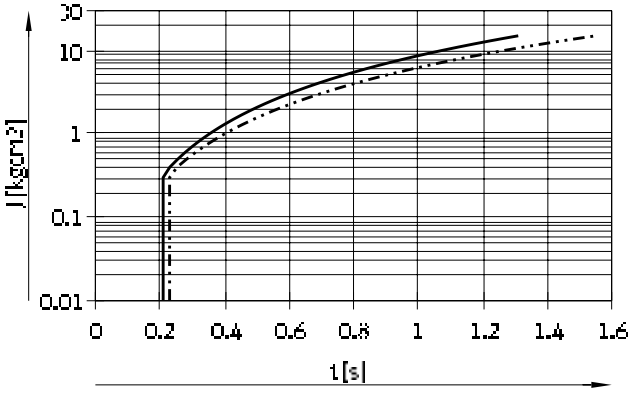

	Ranges
DRRD-8-...-P (90°)	→ 0 ... 15 kgcm²
DRRD-8- ...-P (180°)	→ 0 ... 15 kgcm²

Size 10 with cushioning P

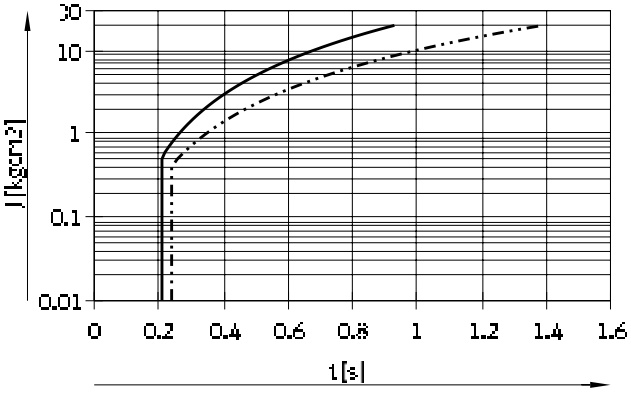

	Ranges
DRRD-10-...-P (90°)	→ 0 ... 20 kgcm²
DRRD-10-...-P (180°)	→ 0 ... 20 kgcm²

Size 12 with cushioning P/Y9
Swivel angle 90°

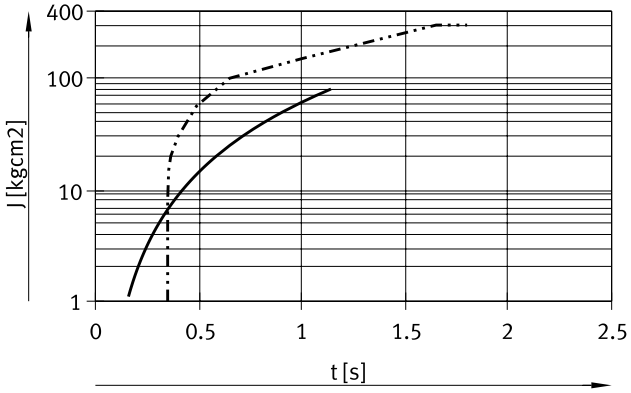

	Ranges
DRRD-12-...-P (90°)	→ 0 ... 80 kgcm²
DRRD-12-...-Y9 (90°)	→ 0 ... 300 kgcm²

Swivel angle 180°

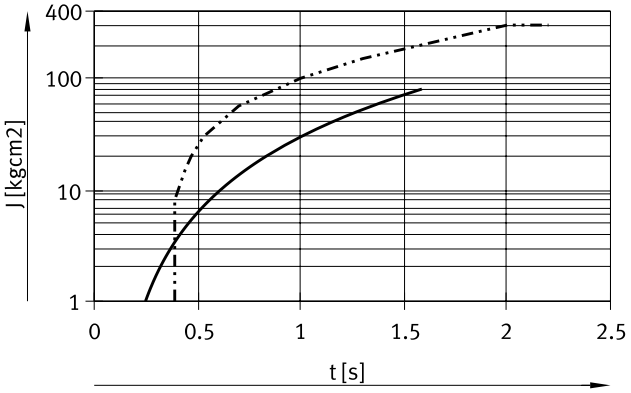

	Ranges
DRRD-12-...-P (180°)	→ 0 ... 80 kgcm²
DRRD-12-...-Y9 (180°)	→ 0 ... 300 kgcm²

Size 12 with cushioning Y12
Swivel angle 90°/180°

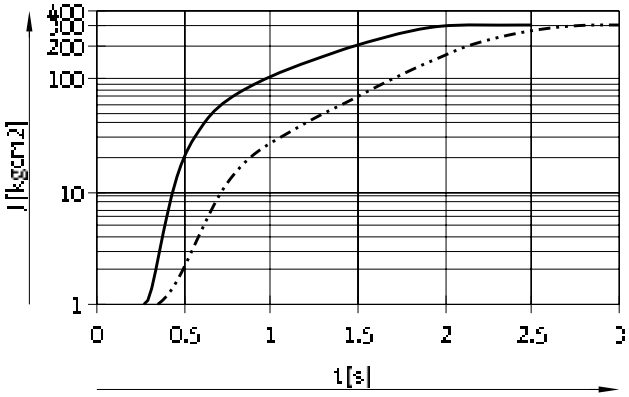

	Ranges
DRRD-12-...-Y12 (90°)	→ 1 ... 300 kgcm²
DRRD-12-...-Y12 (180°)	→ 1 ... 300 kgcm²

Data sheet

Max. load capacity at the flange shaft

The zero point for dimension z is always the flange level of the basic drive, independently of the attachments (flange module).

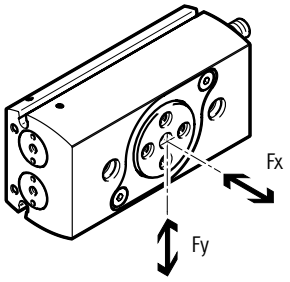

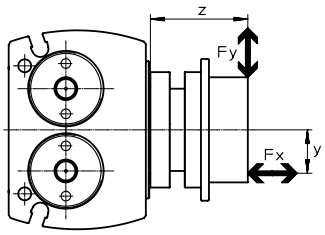

The following equation applies to combined loads (axial and radial):

$$\frac{F_{y\,(z)}}{F_{y\,max.\,(z)}} + \frac{F_{x\,(y)}}{F_{x\,max.\,(y)}} \leq 1$$

Dynamic values

Max. radial force F_y as a function of distance z

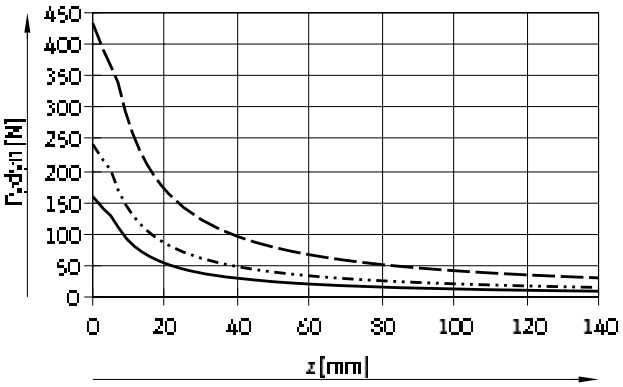

DRRD-8
DRRD-10
DRRD-12

Max. axial force F_x as a function of distance y

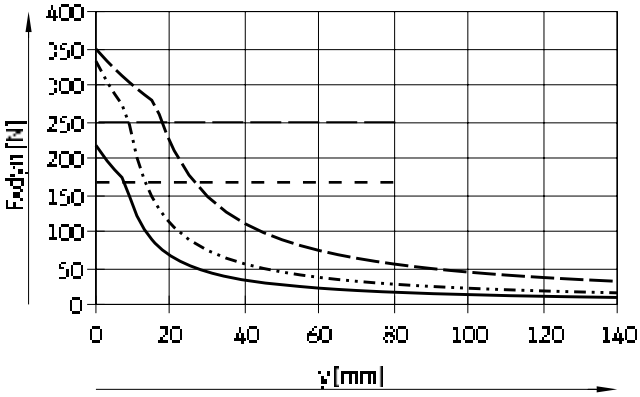

Tensile force limit DRRD-8/10
Tensile force limit DRRD-12

Static values

Max. radial force F_y as a function of distance z

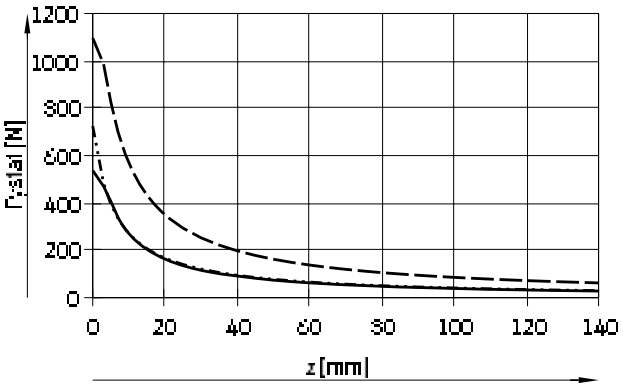

DRRD-8
DRRD-10
DRRD-12

Max. axial force F_x as a function of distance y

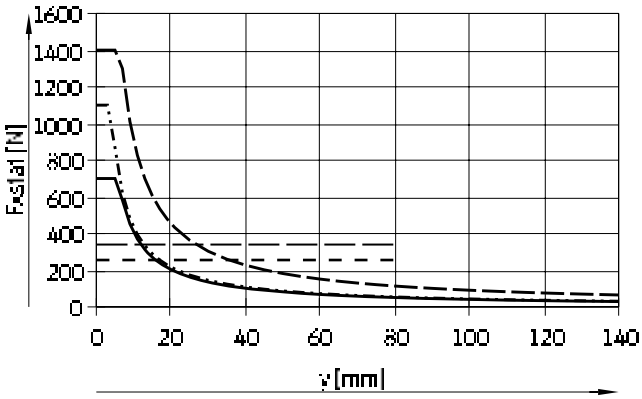

Tensile force limit DRRD-8/10
Tensile force limit DRRD-12

Data sheet

Max. load capacity on the drive shaft (DARF-Q11)

Max. radial forces F_y / axial forces F_x / bending moment M

- For the radial forces F_y, the limits of the flange shaft ➔ page 14 and max. bending moment of the drive shaft apply ➔ table below.
- The bending moment represents the load limit of the drive shaft and must not be exceeded.
- The zero point for dimension z is always the flange level of the basic drive, independently of the attachments (flange module).
- The axial force represents an additional load.

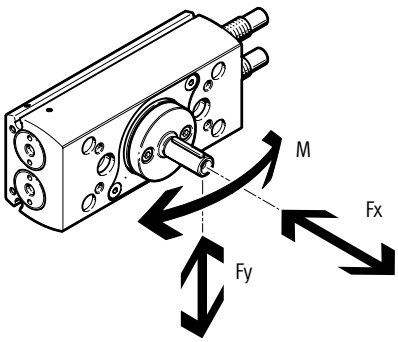

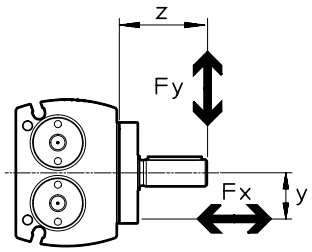

Size		12
Axial force F_x	[N]	170
Bending moment M	[Nm]	5.44

Data sheet

Dimensions Download CAD data ➔ www.festo.com

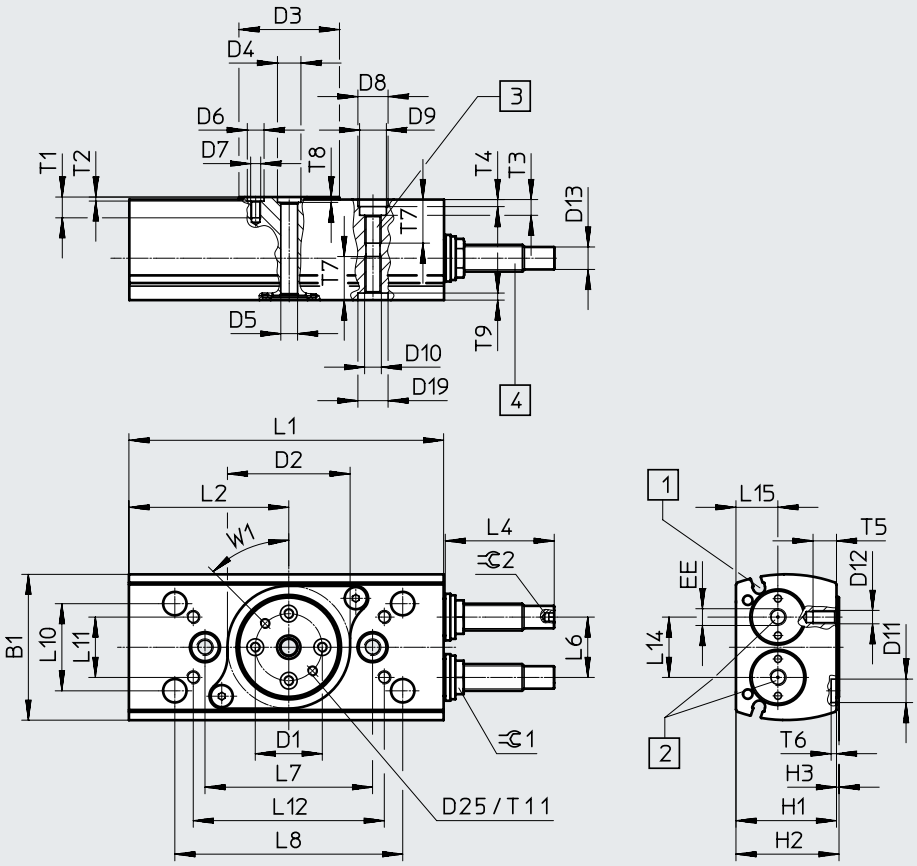

DRRD-8/10

DRRD-...-P

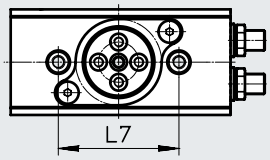

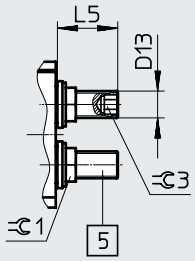

Note

Illustrated position of the flange shaft corresponds to the mid-position (swivel angle 90°).
Dimensions D25, T11 and W1 only for size 12

[1] Sensor slots for proximity switch
[2] Supply ports
[3] Mounting thread
[4] Shock absorber (DRRD-...-Y9)
[5] Cushioning elements (DRRD-...-P)

Data sheet

Size	B1 ±0.25	D1 Ø ±0.025	D2 Ø +0.1	D3 Ø	D4 Ø H7	D5 Ø ±0.1	D6 Ø H7	D7	D8 Ø H7	D9 Ø	D10
8	31.5	12	26	20.4	5	3	5	M3	7	6	M4
10	38	15	32	24	5	3	5	M3	7	6	M4
12	43.5	20	37	30	7	5	5	M3	9	8	M5

Size	D11 Ø H7	D12	D13	D19 Ø H7	D25	H1 +0.4	H2 ±0.2	H3 +0.2/–0.6	L1 ±0.1	L2 +0.1	L6
8	–	–	M6x0.5	7	–	24.5	25.25	0.75	65.6	32.2	$13_{-0.1}$
10	–	–	M6x0.5	7	–	27.5	28.25	0.75	74	38.3	$15.2_{-0.1}$
12	7	M4	M8x1	9	M3	30	30.75	0.75	93.9	47.7	$18^{+0.1}$

Size	L7 ±0.02	L8 ±0.2	L10 ±0.02	L11 ±0.15	L12 ±0.2	L14	L15 –0.1	T1	T2 +0.1	T3	T4 +0.4/–0.1
8	36	–	–	–	–	13	11.1	4.8	1.2	3.4	1.5
10	44	–	–	–	–	15.2	11.1	6.2	1.2	3.4	1.5
12	50	68	26	18	57	18	12.5	5.4	1.2	4.7	2.1

Size	T5	T6 +0.4/–0.1	T7	T8 +0.1	T9 +0.1	T11	EE	W1	⊂ 1	⊂ 2	⊂ 3
8	–	–	10.5	1.2	1.6	–	M3	–	10	–	3
10	–	–	10	1.2	1.6	–	M3	–	10	–	3
12	7	1.6	13	1.6	2.1	5.5	M5	45°	10	2.5	5

Size	Dimension with 180° swivel angle		Swivel angle adjustment range		
	L4	L5	L4 min./max.	L5 min./max.	1 mm = ...°
8	–	11.1	–	–6.1/+0.8	16.4
10	–	12.6	–	–7.6/+1.2	13.64
12	28	17	–1.9/+1.9	–11/+1.8	9.6

Data sheet

Dimensions – Variants Download CAD data ➔ www.festo.com

Y12 – With external shock absorber

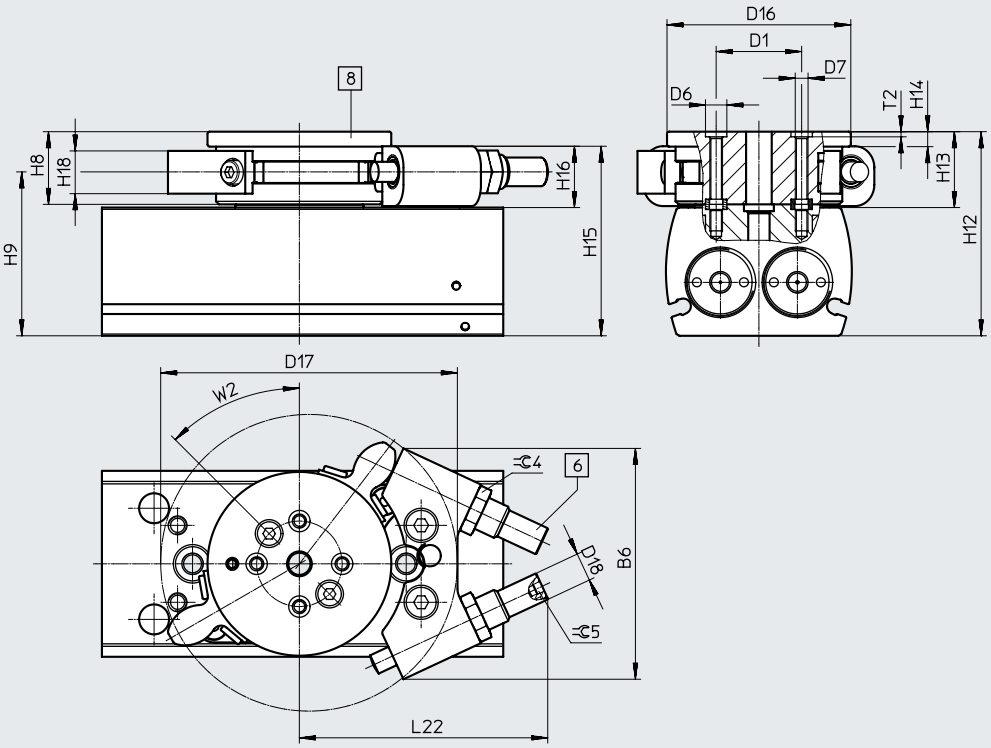

[6] Shock absorber
[8} Flange module

Size	B6 ±0.2	D1 ø ±0.025	D6 ø H7	D7	D16 ø	D17	D18	H8 ±0.1	H9	H12 ±0.3
12	54	20	5	M3	43	69.4	M8x1	17	38.25	47.75

Size	H13	H14	H15	H16	H18	L22 max.	T2 +0.1	W2	4	5
12	17.75	3.5	44	14	10	58.2	1.2	45°	10	2.5

Ordering data

Ordering data

DRRD	Size	Swivel angle [°]	Part no.	Type
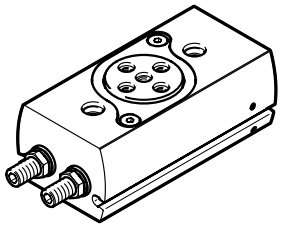	**P – Elastic cushioning rings/plates at both ends**			
	8	180	**2223060**	**DRRD-8-180-FH-PA**
	10		**2350968**	**DRRD-10-180-FH-PA**
	12		**2282067**	**DRRD-12-180-FH-PA**
	Y9 – Linear shock absorber, self-adjusting at both ends			
	12	180	**2399248**	**DRRD-12-180-FH-Y9A**

Ordering table – modular product system

Size	12	Conditions	Code		Enter code
Module no.	**574398**				
Function	Semi-rotary drive		**DRRD**		DRRD
Size	12		**-12**		-12
Nominal swivel angle	180°		**-180**		-180
Output shaft	Flange shaft, hollow		**-FH**		-FH
Cushioning	Elastic cushioning rings/plates at both ends		**-P**		
	Linear shock absorber, self-adjusting at both ends		**-Y9**		
	Linear shock absorber, self-adjusting at both ends, external		**-Y12**		
Position sensing	Via proximity switch		**A**		A
Operating instructions	With operating instructions				
	Without operating instructions		**-DN**		

Peripherals overview

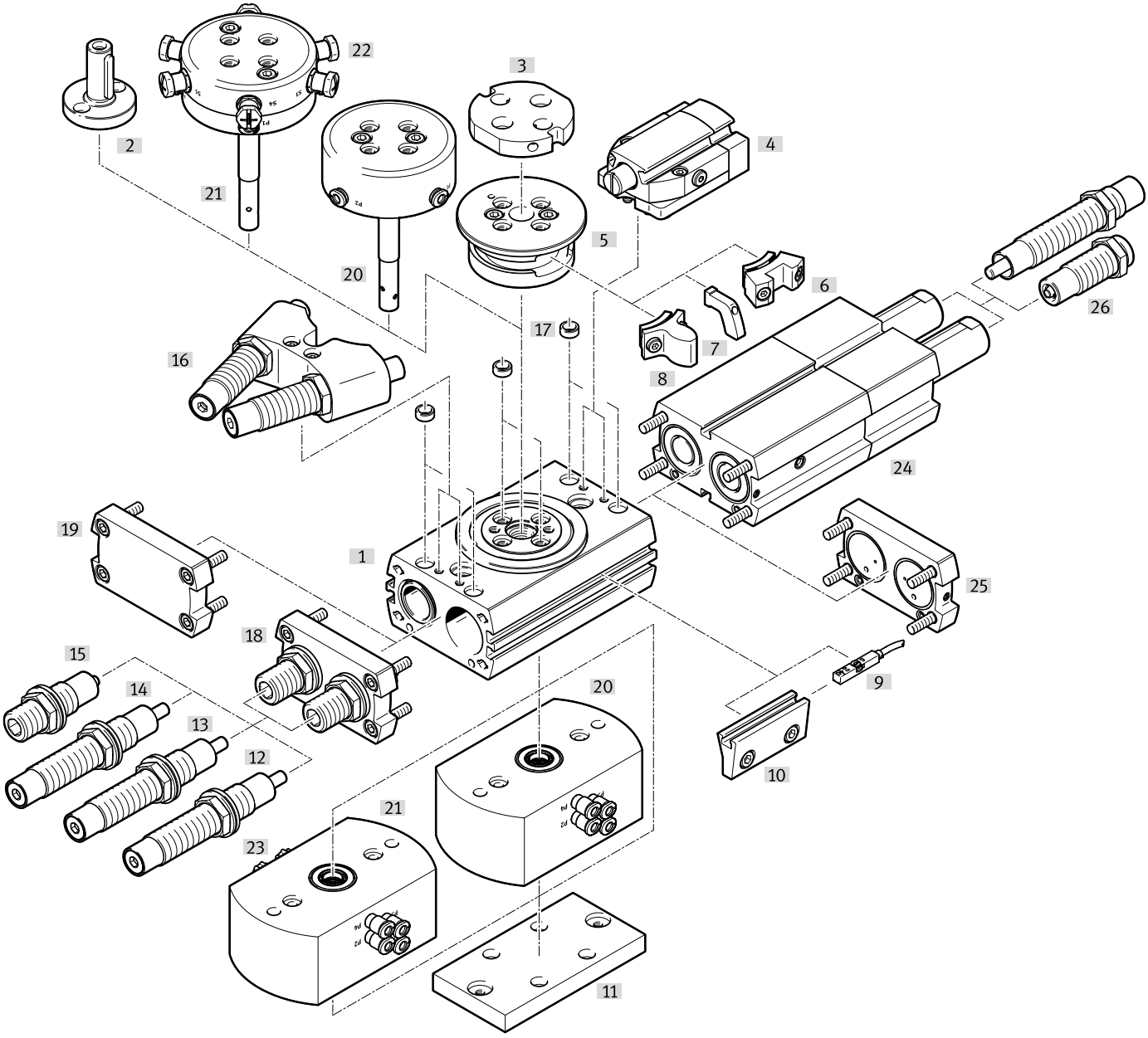

Variants, mounting components and accessories

		Description	Size								➔ Page/ Internet
			16	20	25	32	35	40	50	63	
[1]	Semi-rotary drive DRRD	Double-acting	■	■	■	■	■	■	■	■	20
[2]	Drive shaft[1)] DARF-Q11	• The interface corresponds with that of semi-rotary drive DRQD • The drive shaft should only mounted be directly onto the flange shaft • Suitable for ATEX	■	■	■	■	■	■	–	–	56
[3]	Adapter kit DHAA	• Connecting plate between semi-rotary drive and gripper • Included in the scope of delivery: 2 centring sleeves and screws	■	■	■	■	■	■	■	–	gripper
[4]	End-position locking E1[1)] (clamping unit DADL-...-EL as an accessory)	• Mechanical lock in the end positions to prevent unwanted movement when unpressurised • Included in the scope of delivery: [4], [5], 2x [6]	■	■	■	■	■	■	■	■	57

Peripherals overview

Variants, mounting components and accessories

		Description	Size								→ Page/ Internet
			16	20	25	32	35	40	50	63	
[5]	Flange module	Required to mount components [6], [7] and [8]	■	■	■	■	■	■	■	■	57
[6]	Clamping component (Type: DADL-EC)	Secures the semi-rotary drive DRRD when the cylinder [4] is advanced	■	■	■	■	■	■	■	■	59
[7]	Switch lug DASI-Q11-...-SL	For sensing the piston position using e.g. inductive proximity switches SIES-8M → page 61, in combination with sensor bracket [10]	■	■	■	■	■	■	■	■	59
[8]	Stop element	Serves as an end stop in combination with external shock absorbers (Y12)	■	■	■	■	■	■	■	■	55
[9]	Proximity switch SMT/SME-8	For sensing the piston position	■	■	■	■	■	■	■	■	61
	Position transmitter SMAT-8M	Analogue position feedback from 0 ... 10 V possible	■	■	■	■	■	■	■	■	63
[10]	Sensor mounting R (sensing kit DASI-...-KT as an accessory)	• For sensing the piston position using e.g. inductive proximity switches SIES-8M → page 62 • Included in the scope of delivery: [5], 2x [7], 2x [10]	■	■	■	■	■	■	■	■	58
[11]	Adapter kit DHAA	Connecting plate between semi-rotary drive and drive	■	■	■	■	■	■	■	–	adapter
[12]	Shock absorber Y9	Linear shock absorber, self-adjusting at both ends	■	■	■	■	■	■	■	■	66
[13]	Shock absorber, hard Y10	Linear shock absorber, self-adjusting at both ends, hard	–	–	■	–	■	■	■	■	55
[14]	Shock absorber, soft Y14	Linear shock absorber, self-adjusting at both ends, soft	■	■	■	■	■	■	–	–	55
[15]	Shock absorber P	Elastic cushioning elements with metal end position, at both ends	■	■	■	■	■	■	–	–	55
[16]	Shock absorber, external Y12	• Linear shock absorber, self-adjusting at both ends, external • Included in the scope of delivery: [5], 2x [8], [16]	■	■	■	■	■	■	■	■	55
[17]	Centring sleeve ZBH	For centring attachment (2 pieces included in the scope of delivery of the drive)	■	■	■	■	■	■	■	■	60
[18]	End cap	In conjunction with elastic cushioning element P or shock absorber Y9, Y10, Y14	■	■	■	■	■	■	■	■	–
[19]	End cap	In combination with external shock absorber Y12	■	■	■	■	■	■	■	■	–
[20]	Energy through-feed pneumatic	Enables the quick and easy pneumatic supply of parts connected to the flange (e.g. gripper)	■	■	■	■	■	■	■	■	37
[21]	Energy through-feed pneumatic/electrical	Enables the quick and easy pneumatic/electrical supply of parts connected to the flange (e.g. gripper)	■	■	■	■	■	■	■	■	37
[22]	Connecting cable NEBU	From the energy through-feed to the proximity switch	■	■	■	■	■	■	■	■	64
[23]	Connecting cable NEBU	From the energy through-feed to the controller	■	■	■	■	■	■	■	■	64
[24]	Intermediate position	Possible at 90°	■	■	■	■	■	■	■	–	40
[25]	Connection cap	For the supply ports	■	■	■	■	■	■	■	–	–
[26]	Shock absorber	The cushioning for the intermediate position corresponds to the cushioning for the basic drive. Except in the case of Y12 when shock absorbers Y9 are used	■	■	■	■	■	■	■	–	59
–	One-way flow control valves GRLA	To set the swivel speed	■	■	■	■	■	■	■	■	65

1) The combination of drive shaft [2] and end-position locking E1 [4] is not possible.

Data sheet

Function

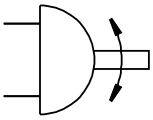

Diameter
16 ... 63 mm

Torque
1.6 ... 112 Nm

www.festo.com

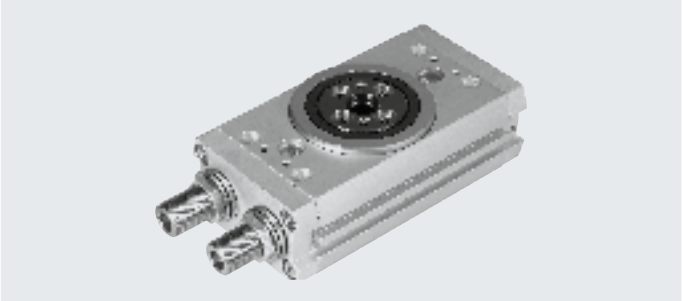

General technical data									
Size		16	20	25	32	35	40	50	63
Design		Gear rack/pinion							
Mode of operation		Double-acting							
Pneumatic connection									
DRRD-...		M5			G1/8			G1/4	G3/8
DRRD-...-PS1		M5						G1/8	–
Type of mounting		With through-hole							
		Via female thread							
Swivel angle									
DRRD-...	[°]	180 (➔ page 25)							
DRRD-...-PS1	[°]	90 ±10°							–
Cushioning with fixed stop									
DRRD-...-P		Elastic cushioning rings/plates at both ends						–	
DRRD-...-Y9		Linear shock absorber, self-adjusting at both ends							
DRRD-...-Y10[1]		–		Linear shock absorber, self-adjusting at both ends, hard	–	Linear shock absorber, self-adjusting at both ends, hard			
DRRD-...-Y12		External linear shock absorber, self-adjusting at both ends							
DRRD-...-Y14[1]		Linear shock absorber, self-adjusting at both ends, soft						–	
Repetition accuracy									
DRRD-...	[°]	< 0.05						≤0.03	
DRRD-...-PS1									
Approached from one end	[°]	0.1							–
Approached from both ends	[°]	0.7							–
Axial run-out[2]	[mm]	< 0.05							
Max. axial load (static)	[N]	1500	2400	2400	3750	6100	6100	9000	11000
Mounting position		Any							

1) Not in combination with intermediate position DRRD-...-PS1

2) Axial run-out in new condition

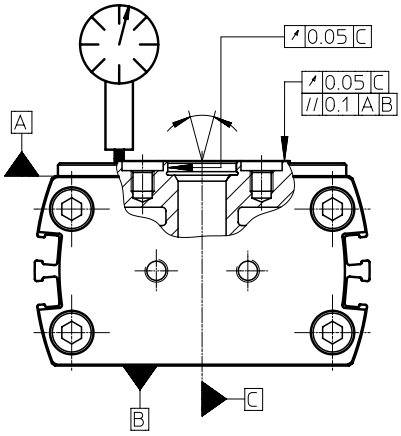

Data sheet

Operating and environmental conditions		
Operating medium		Compressed air to ISO 8573-1:2010 [7:4:4]
Note on operating/pilot medium		Lubricated operation possible (in which case lubricated operation will always be required)
Operating pressure		
DRRD-...		
DRRD-...-P	[MPa]	0.3 ... 0.8
	[bar]	3 ... 8
	[psi]	43.5 ... 118
DRRD-...-Y9/-Y10/-Y12/-Y14	[MPa]	0.2 ... 1
	[bar]	2 ... 10
	[psi]	29 ... 145
DRRD-...-PS1		
DRRD-...-P	[MPa]	0.4 ... 0.8
	[bar]	4 ... 8
	[psi]	58 ... 116
DRRD-...-Y9/-Y12	[MPa]	0.2 ... 1
	[bar]	2 ... 10
	[psi]	29 ... 145
Ambient temperature	[°C]	–10 ... +60
Storage temperature	[°C]	–20 ... +60
Degree of protection based on EN 60529		
DRRD-...-SG		IP65

ATEX[1]	
ATEX category for gas	II 2G
Type of ignition protection for gas	Ex h IIC T4 Gb
ATEX category for dust	II 2D
Type of ignition protection for dust	Ex h IIIC T120°C Db
Explosion-proof ambient temperature	–10°C ≤ Ta ≤ +60°C
CE marking (see declaration of conformity)	To EU Explosion Protection Directive (ATEX)
UKCA marking (see declaration of conformity)	To UK EX instructions
Explosion protection certification outside the EU	EPL Db (GB)
	EPL Gb (GB)

1) Note the ATEX certification of the accessories.

Weights [g]								
Size	16	20	25	32	35	40	50	63
Basic drive with cushioning								
DRRD-...-P	640	839	1349	2815	4510	6070	–	–
DRRD-...-Y9/-Y10/-Y14	650	883	1358	2976	4784	6424	11300	19100
DRRD-...-Y12	757	1132	1705	3760	5425	7160	12450	22400
Energy through-feed (additional)								
DRRD-...-P	320	350	710	920	1090	1470	1950	2250
DRRD-...-P...E...	460	480	720	900	880	1770	2330	2610
Intermediate position (additional)								
DRRD-...-P	502	701	1078	2304	–	–	–	–
DRRD-...-Y9	511	720	1130	2450	3940	4380	8270	–
End-position locking (additional)								
DRRD-...-E1	166	382	370	600	900	900	1610	2380
Sensor mounting, external (additional)								
DRRD-...-R	110	192	192	366	485	485	810	1390

Data sheet

Forces and torques									
Size		16	20	25	32	35	40	50	63
Theoretical torque at 0.6 MPa (6 bar, 87 psi)	[Nm]	1.6	2.4	5.1	10.1	15.8	24.1	53	112
Max. permissible mass moment of inertia									
Rotation from end position to end position									
DRRD-...-P	[kgcm²]	175	400	900	1500	2500	6700	–	–
DRRD-...-Y9	[kgcm²]	700	1250	1500	26000	15000	23000	40000	40000
DRRD-...-Y10	[kgcm²]	–	–	5500	–	45000	67000	200000	420000
DRRD-...-Y12	[kgcm²]	900	1500	5500	26000	45000	67000	200000	420000
DRRD-...-Y14	[kgcm²]	100	150	100	2000	2000	23000	–	–
Rotation with intermediate position									
DRRD-...-P	[kgcm²]	150	300	400	500	–	–	–	–
DRRD-...-Y9	[kgcm²]	500	900	1500	8000	15000	23000	40000	–
DRRD-...-Y12	[kgcm²]	500	900	1500	8000	15000	23000	40000	–

Note

If, in the end positions, a torque which exceeds 50% of the theoretical torque acts against the direction of rotation, no exact end position is guaranteed.

This can be avoided by using external shock absorbers (Y12) or a semi-rotary drive with double the torque.

Note

The cushioning for the intermediate position corresponds to the cushioning for the basic drive. Except in the case of cushioning Y12, when shock absorbers Y9 are used.

In combination with cushioning P, the intermediate position is only available for sizes 16 … 32.

Materials

Sectional view

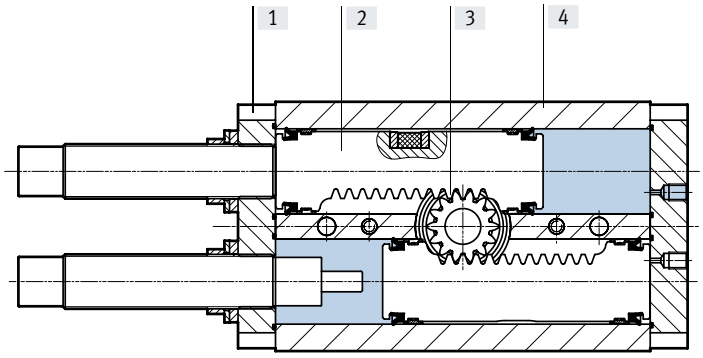

Semi-rotary drive		
[1]	Cover	Anodised wrought aluminium alloy
[2]	Piston	Stainless steel
[3]	Flange shaft	Tempered steel
[4]	Housing	Smooth-anodised wrought aluminium alloy
	Seals	NBR
	Piston seal	TPE-U(PU)
	Note on materials	RoHS-compliant
		Contains paint-wetting impairment substances
	PWIS conformity	VDMA24364 zone III

Data sheet

Swivel angle

Fundamentally, the following applies:
Swivel angle α ≥ cushioning angle β
Swivel angle $\alpha = 180° + \Delta\alpha_{right} + \Delta\alpha_{left}$

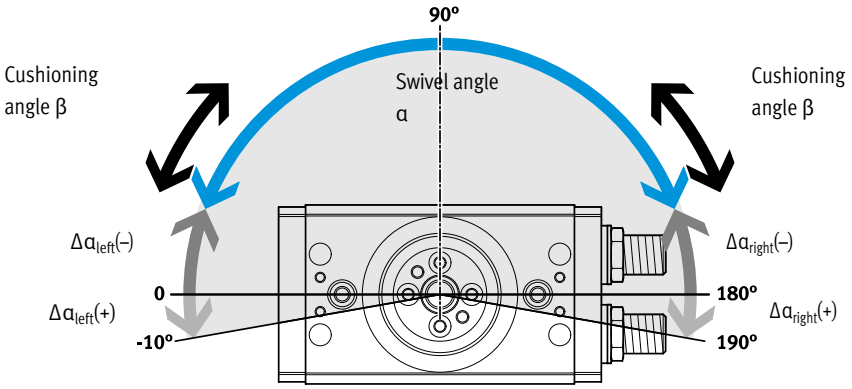

Note
Illustrated position of the flange shaft corresponds to the mid-position (swivel angle 90°)

Size		16	20	25	32	35	40	50	63
Swivel angle α	[°]	180							
Min. swivel angle α[1]									
DRRD-…-P	[°]	36	45	33	33	36	23	–	–
DRRD-…-Y9/-Y10/-Y14	[°]	43	72	79	82	85	56	61	48
DRRD-…-Y12	[°]	20	24	38	34	34	34	30	34
DRRD-…-E1	[°]	60	60	60	55	57	57	62	55
Max. swivel angle α[2]									
DRRD-…	[°]	200							
DRRD-…-Y12	[°]	192	194	190	190	193	193	186	190
Swivel angle adjustment α per side (infinitely adjustable)									
DRRD-…-P	[°]	–100 … +10						–	–
DRRD-…-Y9/-Y10/-Y14	[°]	≥ –100 … +10							
DRRD-…-Y12	[°]	–94 … +6	–85 … +7	–88 … +5	–93 … +5	–86 … +6.5		–86 … +3	–91 … +5
Cushioning angle β									
DRRD-…-P	[°]	36	45	33	33	36	23	–	–
DRRD-…-Y9/-Y10/-Y14	[°]	43	72	79	82	85	56	61	48
DRRD-…-Y12	[°]	10	12	19	17	17	17	15	17

1) It is possible to set smaller swivel angles. However, this reduces the cushioning energy
2) The max. swivel angle is reduced by approx. 10° in combination with the external sensor mounting

Swivel angle adjustment

Clockwise direction of rotation:
- Swivel angle decreases

Anticlockwise direction of rotation:
- Swivel angle increases

The swivel angle is adjusted via the cushioning elements using an Allen key. Any reduction in the swivel angle should preferably be evenly split between the two end positions.

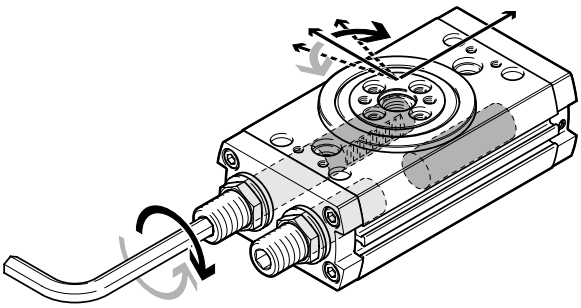

Swivel angle adjustment of the intermediate position → page 40

Data sheet

Max. permissible mass moment of inertia J at the flange shaft as a function of swivel time t
(at room temperature and an operating pressure of 6 bar)

Size 16 with cushioning P/Y9/Y14

Swivel angle 90°

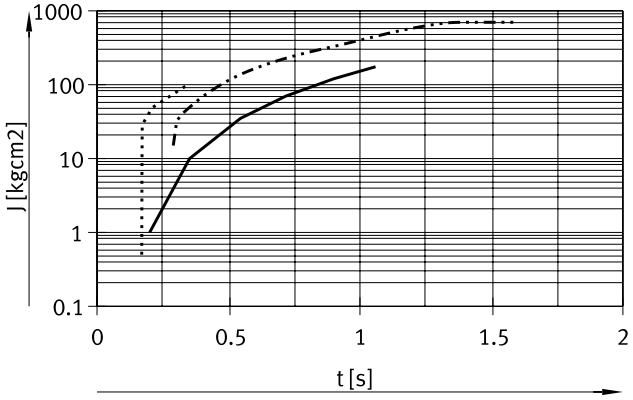

	Ranges
DRRD-16-...-P (90°)	→ 1 ... 175 kgcm²
DRRD-16-...-Y9 (90°)	→ 15 ... 700 kgcm²
DRRD-16-...-Y14 (90°)	→ 0.5 ... 100 kgcm²

Swivel angle 180°

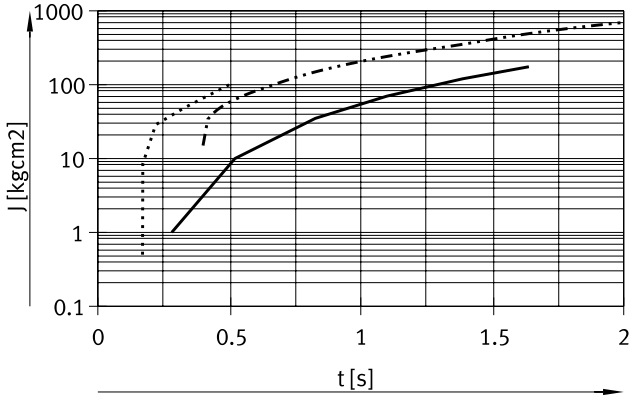

	Ranges
DRRD-16-...-P (180°)	→ 1 ... 175 kgcm²
DRRD-16-...-Y9 (180°)	→ 15 ... 700 kgcm²
DRRD-16-...-Y14 (180°)	→ 0.5 ... 100 kgcm²

Size 20 with cushioning P/Y9/Y14

Swivel angle 90°

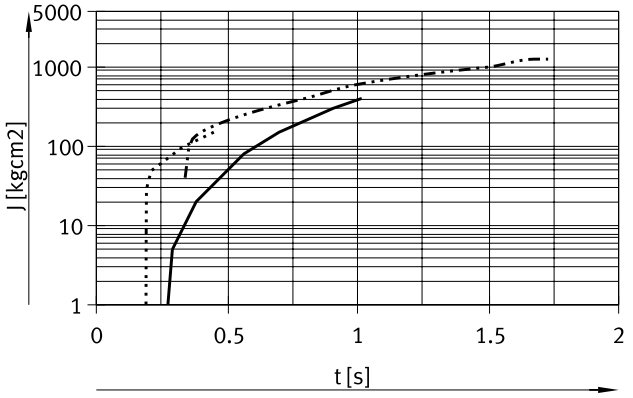

	Ranges
DRRD-20-...-P (90°)	→ 1 ... 400 kgcm²
DRRD-20-...-Y9 (90°)	→ 40 ... 1250 kgcm²
DRRD-20-...-Y14 (90°)	→ 1 ... 150 kgcm²

Swivel angle 180°

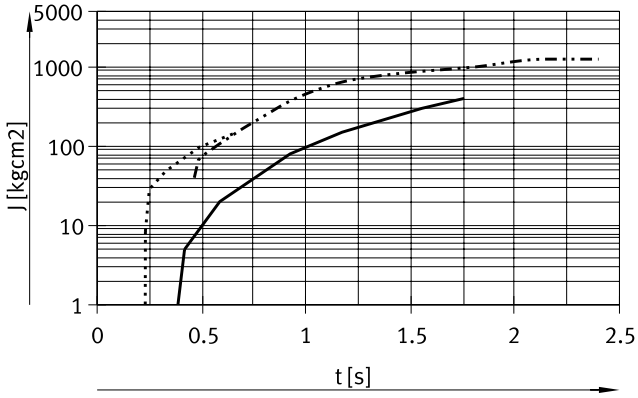

	Ranges
DRRD-20-...-P (180°)	→ 1 ... 400 kgcm²
DRRD-20-...-Y9 (180°)	→ 40 ... 1250 kgcm²
DRRD-20-...-Y14 (180°)	→ 1 ... 150 kgcm²

Data sheet

Max. permissible mass moment of inertia J at the flange shaft as a function of swivel time t
(at room temperature and an operating pressure of 6 bar)

Size 25 with cushioning P/Y9/Y10/Y14

Swivel angle 90°

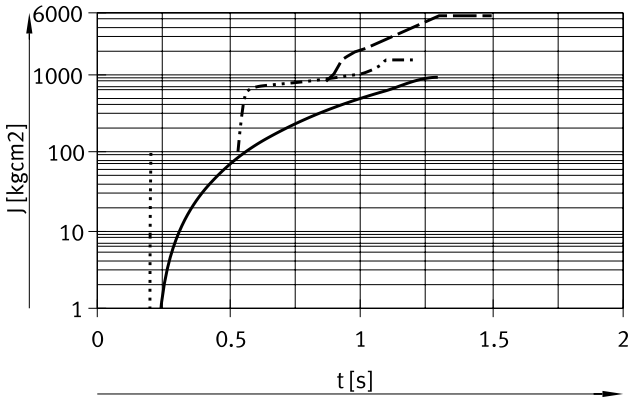

	Ranges
DRRD-25-...-P (90°)	→ 1 ... 900 kgcm²
DRRD-25-...-Y9 (90°)	→ 100 ... 1500 kgcm²
DRRD-25-...-Y10 (90°)	→ 800 ... 5500 kgcm²
DRRD-25-...-Y14 (90°)	→ 1 ... 100 kgcm²

Swivel angle 180°

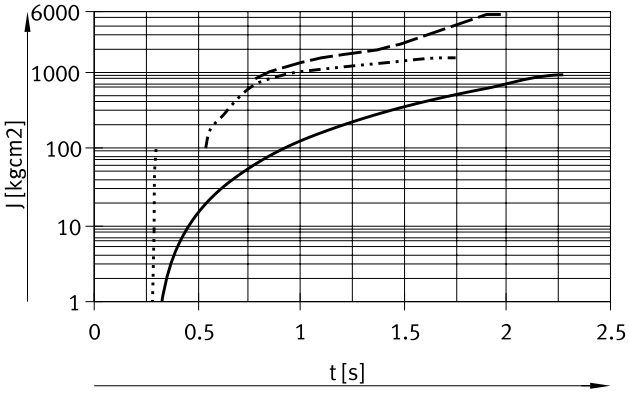

	Ranges
DRRD-25-...-P (180°)	→ 1 ... 900 kgcm²
DRRD-25-...-Y9 (180°)	→ 100 ... 1500 kgcm²
DRRD-25-...-Y10 (180°)	→ 800 ... 5500 kgcm²
DRRD-25-...-Y14 (180°)	→ 1 ... 100 kgcm²

Size 32 with cushioning P/Y9/Y14

Swivel angle 90°

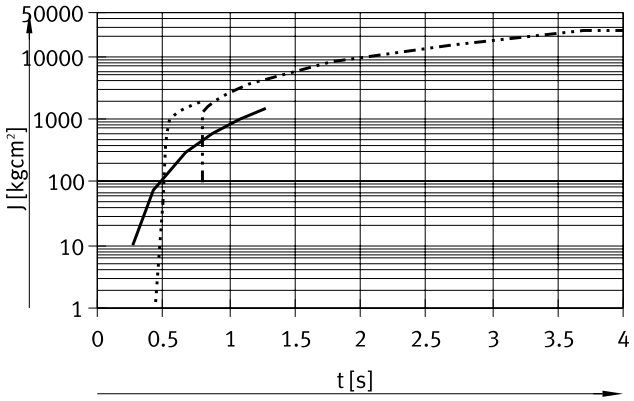

	Ranges
DRRD-32-...-P (90°)	→ 10 ... 1500 kgcm²
DRRD-32-...-Y9 (90°)	→ 100 ... 26000 kgcm²
DRRD-32-...-Y14 (90°)	→ 1 ... 2000 kgcm²

Swivel angle 180°

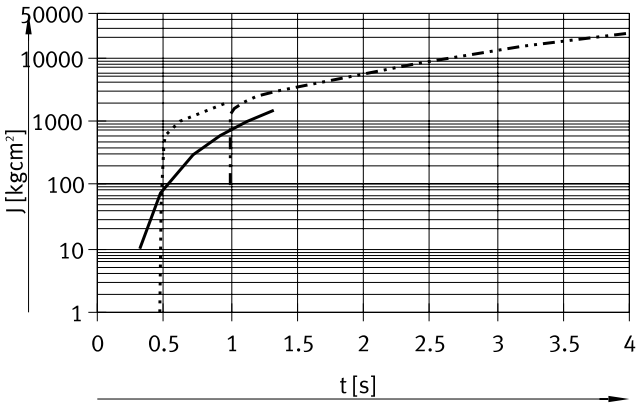

	Ranges
DRRD-32-...-P (180°)	→ 10 ... 1500 kgcm²
DRRD-32-...-Y9 (180°)	→ 100 ... 26000 kgcm²
DRRD-32-...-Y14 (180°)	→ 1 ... 2000 kgcm²

Data sheet

Max. permissible mass moment of inertia J at the flange shaft as a function of swivel time t (at room temperature and an operating pressure of 6 bar)

Size 35 with cushioning P/Y9/Y10/Y14

Swivel angle 90°

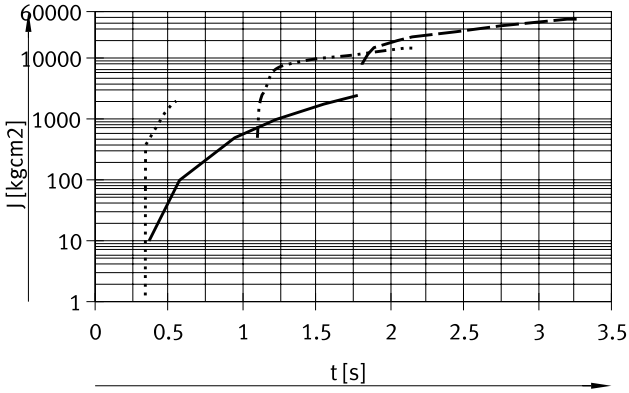

	Ranges
DRRD-35-...-P (90°)	→ 10 ... 2500 kgcm²
DRRD-35-...-Y9 (90°)	→ 500 ... 15000 kgcm²
DRRD-35-...-Y10 (90°)	→ 8000 ... 45000 kgcm²
DRRD-35-...-Y14 (90°)	→ 1 ... 2000 kgcm²

Swivel angle 180°

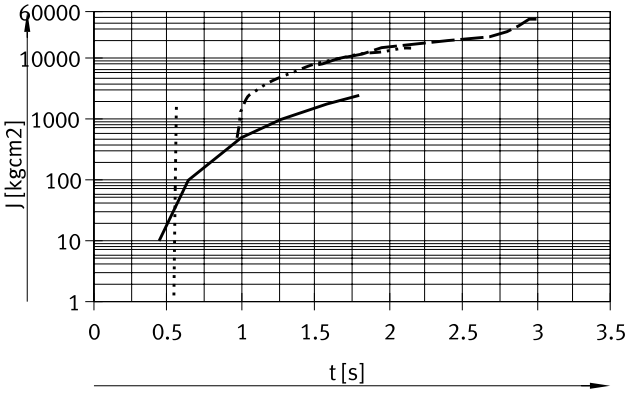

	Ranges
DRRD-35-...-P (180°)	→ 10 ... 2500 kgcm²
DRRD-35-...-Y9 (180°)	→ 500 ... 15000 kgcm²
DRRD-35-...-Y10 (180°)	→ 8000 ... 45000 kgcm²
DRRD-35-...-Y14 (180°)	→ 1 ... 2000 kgcm²

Size 40 with cushioning P/Y9/Y10/Y14

Swivel angle 90°

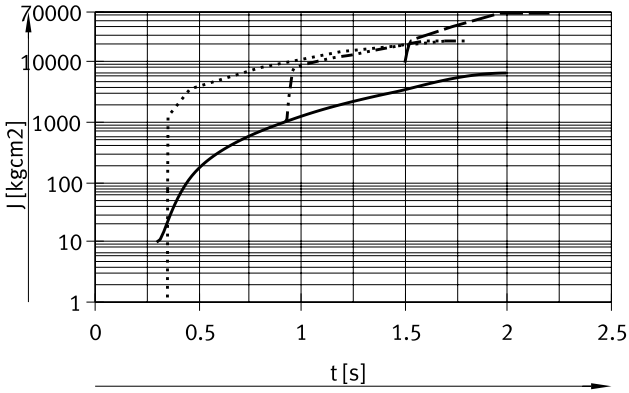

	Ranges
DRRD-40-...-P (90°)	→ 10 ... 6700 kgcm²
DRRD-40-...-Y9 (90°)	→ 1000 ... 23000 kgcm²
DRRD-40-...-Y10 (90°)	→ 10000 ... 67000 kgcm²
DRRD-40-...-Y14 (90°)	→ 1 ... 23000 kgcm²

Swivel angle 180°

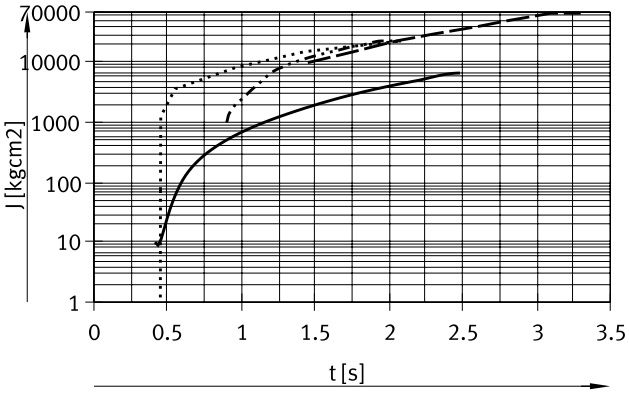

	Ranges
DRRD-40-...-P (180°)	→ 10 ... 6700 kgcm²
DRRD-40-...-Y9 (180°)	→ 1000 ... 23000 kgcm²
DRRD-40-...-Y10 (180°)	→ 10000 ... 67000 kgcm²
DRRD-40-...-Y14 (180°)	→ 1 ... 23000 kgcm²

Data sheet

Max. permissible mass moment of inertia J at the flange shaft as a function of swivel time t
(at room temperature and an operating pressure of 6 bar)

Size 50 with cushioning Y9/Y10

Swivel angle 90°

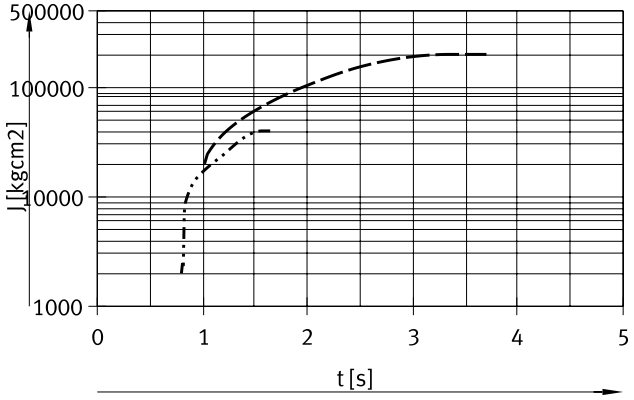

Ranges

DRRD-50-...-Y9 (90°) → 2000 ... 40000 kgcm²

DRRD-50-...-Y10 (90°) → 20000 ... 200000 kgcm²

Swivel angle 180°

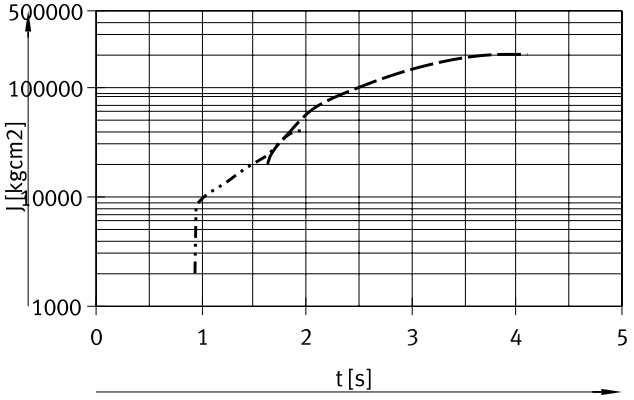

Ranges

DRRD-50-...-Y9 (180°) → 2000 ... 40000 kgcm²

DRRD-50-...-Y10 (180°) → 20000 ... 200000 kgcm²

Size 63 with cushioning Y9/Y10

Swivel angle 90°

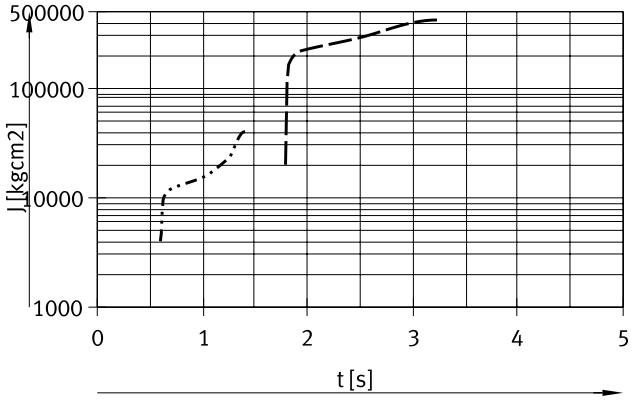

Ranges

DRRD-63-...-Y9 (90°) → 4000 ... 40000 kgcm²

DRRD-63-...-Y10 (90°) → 20000 ... 420000 kgcm²

Swivel angle 180°

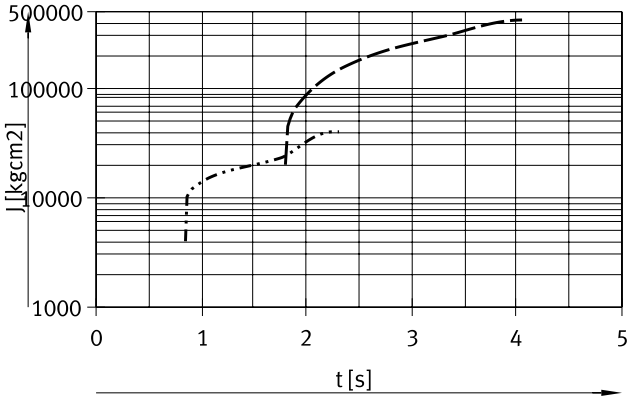

Ranges

DRRD-63-...-Y9 (180°) → 4000 ... 40000 kgcm²

DRRD-63-...-Y10 (180°) → 20000 ... 420000 kgcm²

Data sheet

Max. permissible mass moment of inertia J at the flange shaft as a function of swivel time t
(at room temperature and an operating pressure of 6 bar)

Size 16 with cushioning Y12
Swivel angle 90°/180°

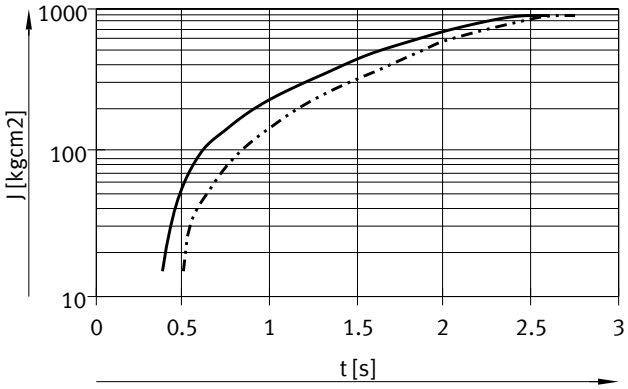

	Ranges
DRRD-16-...-Y12 (90°)	➔ 15 ... 900 kgcm²
DRRD-16-...-Y12 (180°)	➔ 15 ... 900 kgcm²

Size 20 with cushioning Y12

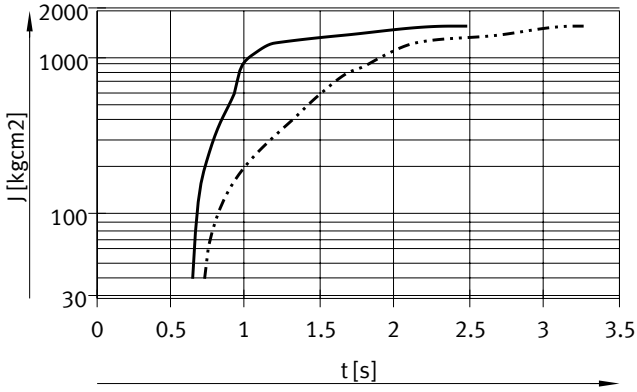

	Ranges
DRRD-20-...-Y12 (90°)	➔ 40 ... 1600 kgcm²
DRRD-20-...-Y12 (180°)	➔ 40 ... 1600 kgcm²

Size 25 with cushioning Y12
Swivel angle 90°/180°

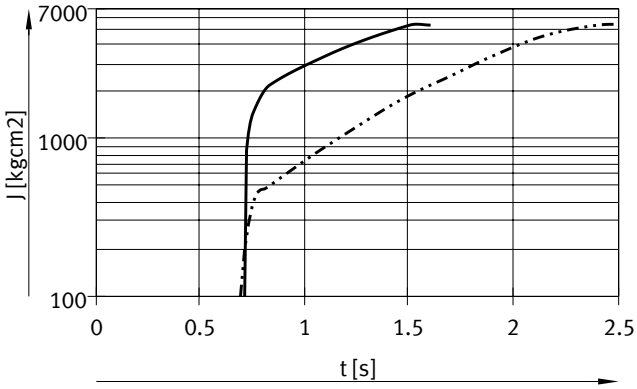

	Ranges
DRRD-25-...-Y12 (90°)	➔ 100 ... 5500 kgcm²
DRRD-25-...-Y12 (180°)	➔ 100 ... 5500 kgcm²

Size 32 with cushioning Y12

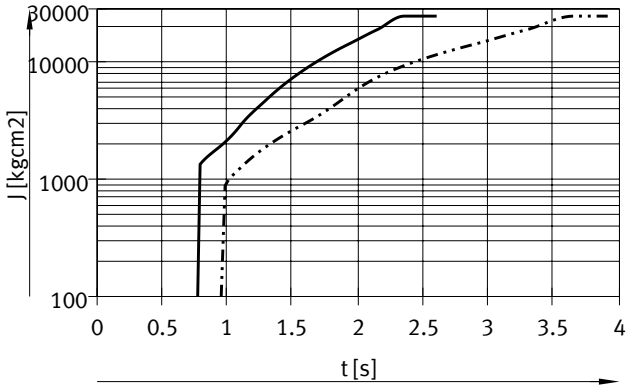

	Ranges
DRRD-32-...-Y12 (90°)	➔ 100 ... 26000 kgcm²
DRRD-32-...-Y12 (180°)	➔ 100 ... 26000 kgcm²

Data sheet

Max. permissible mass moment of inertia J at the flange shaft as a function of swivel time t
(at room temperature and an operating pressure of 6 bar)

Size 35 with cushioning Y12
Swivel angle 90°/180°

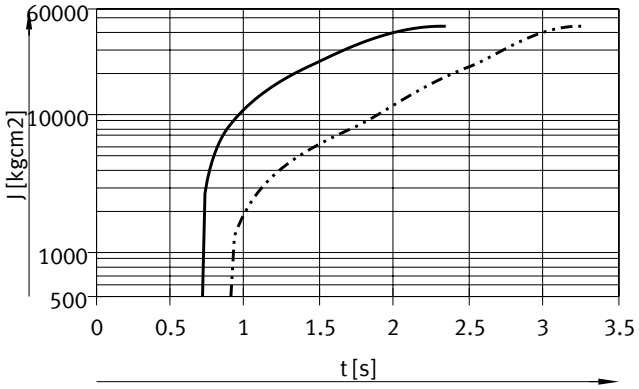

	Ranges
DRRD-35-...-Y12 (90°)	➔ 500 ... 45000 kgcm²
DRRD-35-...-Y12 (180°)	➔ 500 ... 45000 kgcm²

Size 40 with cushioning Y12

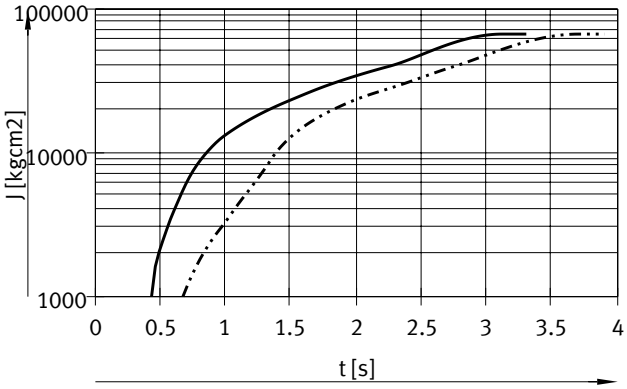

	Ranges
DRRD-40-...-Y12 (90°)	➔ 1000 ... 67000 kgcm²
DRRD-40-...-Y12 (180°)	➔ 1000 ... 67000 kgcm²

Size 50 with cushioning Y12
Swivel angle 90°/180°

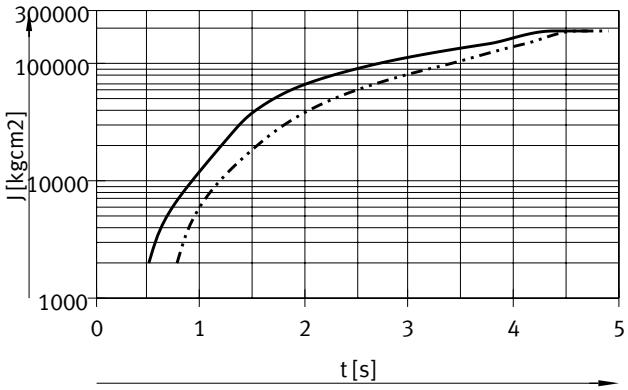

	Ranges
DRRD-50-...-Y12 (90°)	➔ 2000 ... 200000 kgcm²
DRRD-50-...-Y12 (180°)	➔ 2000 ... 200000 kgcm²

Size 63 with cushioning Y12

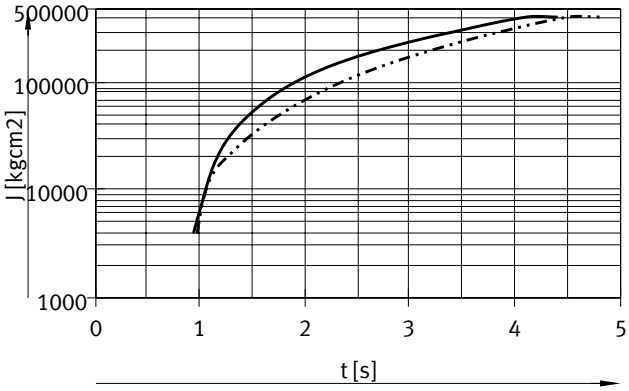

	Ranges
DRRD-63-...-Y12 (90°)	➔ 4000 ... 420000 kgcm²
DRRD-63-...-Y12 (180°)	➔ 4000 ... 420000 kgcm²

Data sheet

Max. dynamic load capacity at the flange shaft

The zero point for dimension Z is always the flange level of the basic drive, independently of the attachments (flange module).

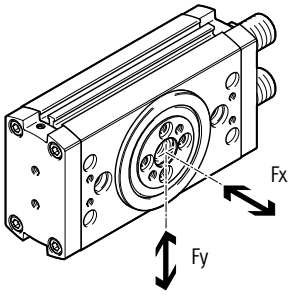

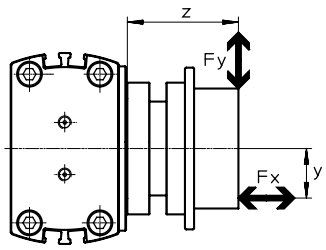

The following equation applies to combined loads (axial and radial):

$$\frac{F_{y\,(z)}}{F_{y\,max.\,(z)}} + \frac{F_{x\,(y)}}{F_{x\,max.\,(y)}} \leq 1$$

Max. dynamic radial force F_y as a function of distance z

Size 16/20

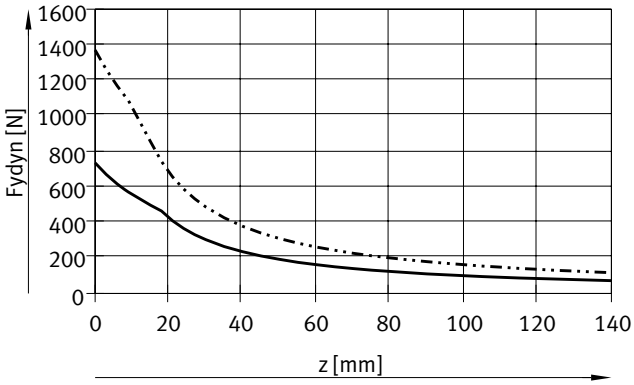

DRRD-16
DRRD-20

Size 25/32

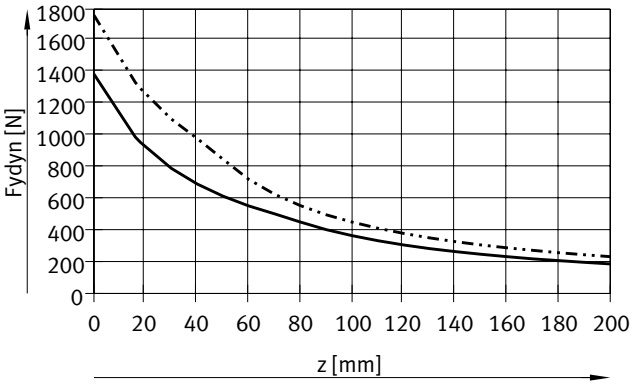

DRRD-25
DRRD-32

Size 35/40

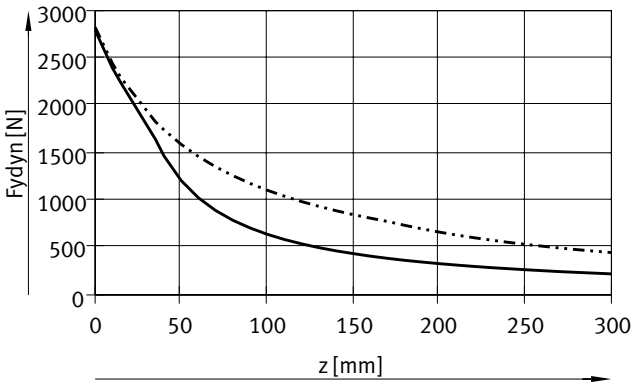

DRRD-35
DRRD-40

Size 50/63

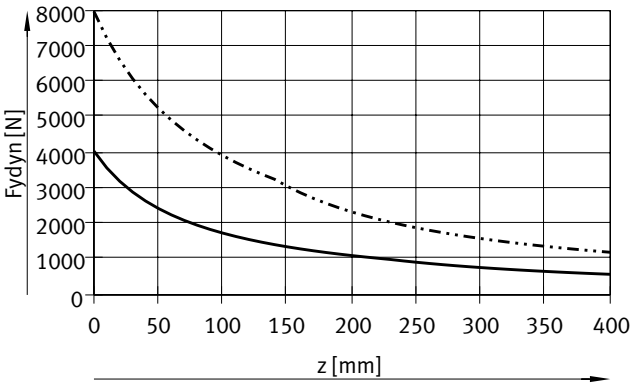

DRRD-50
DRRD-63

Data sheet

Max. dynamic load capacity at the flange shaft

The zero point for dimension Z is always the flange level of the basic drive, independently of the attachments (flange module).

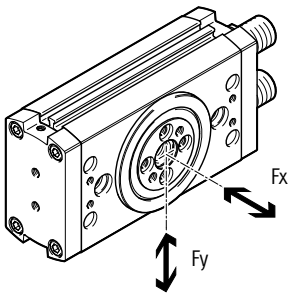

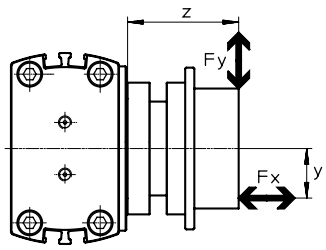

The following equation applies to combined loads (axial and radial):

$$\frac{F_{y\,(z)}}{F_{y\,max.\,(z)}} + \frac{F_{x\,(y)}}{F_{x\,max.\,(y)}} \leq 1$$

Max. dynamic radial force F_x as a function of distance y

Size 16/20

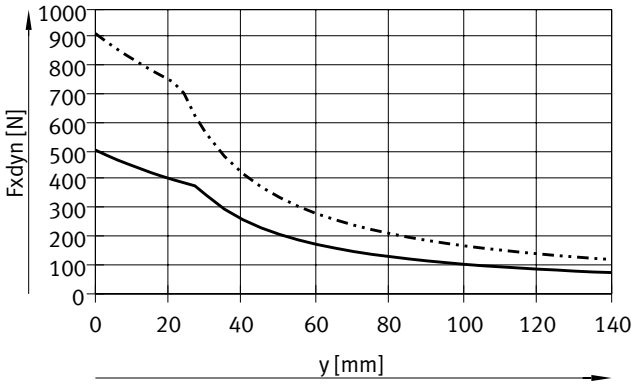

DRRD-16
DRRD-20

Size 25/32

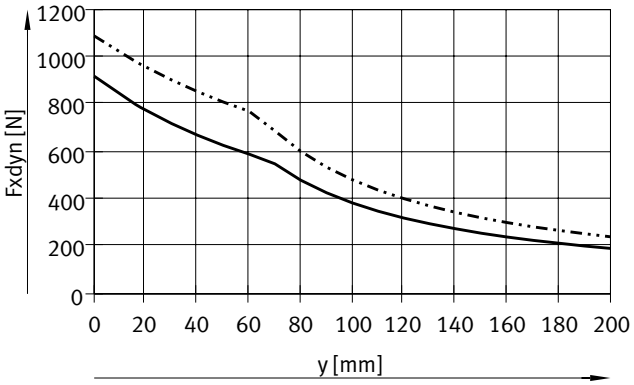

DRRD-25
DRRD-32

Size 35/40

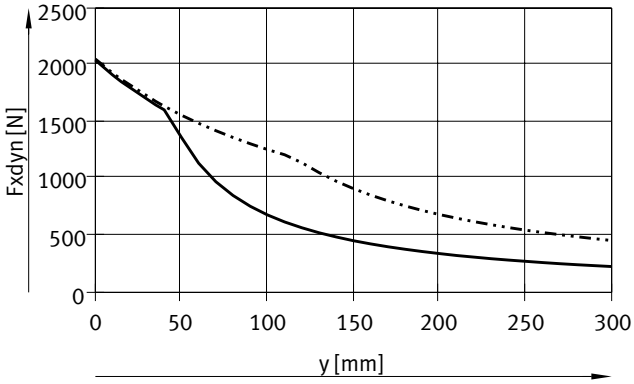

DRRD-35
DRRD-40

Size 50/63

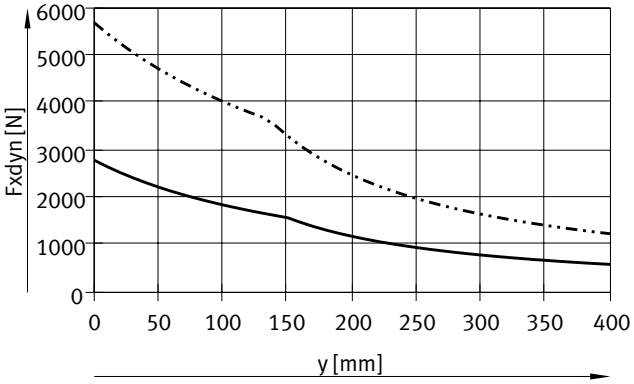

DRRD-50
DRRD-63

Data sheet

Max. static load capacity at the flange shaft

The zero point for dimension Z is always the flange level of the basic drive, independently of the attachments (flange module).

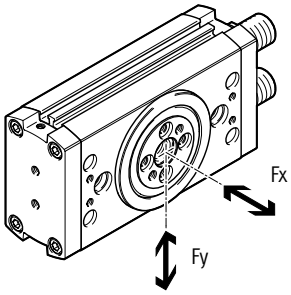

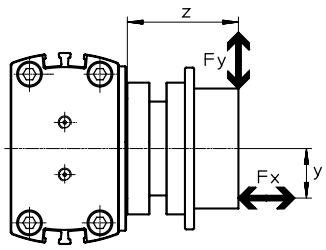

The following equation applies to combined loads (axial and radial):

$$\frac{F_{y\,(z)}}{F_{y\,max.\,(z)}} + \frac{F_{x\,(y)}}{F_{x\,max.\,(y)}} \leq 1$$

Max. static radial force F_y as a function of distance z

Size 16/20

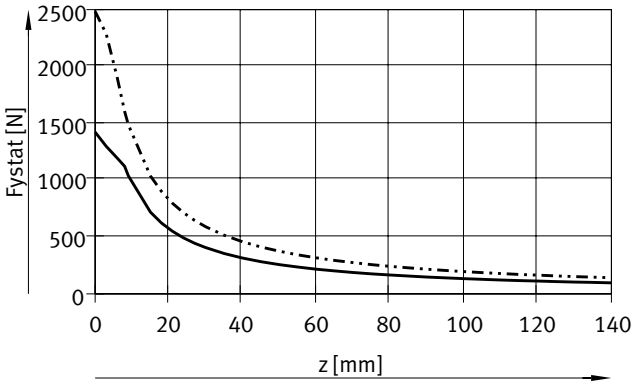

DRRD-16
DRRD-20

Size 25/32

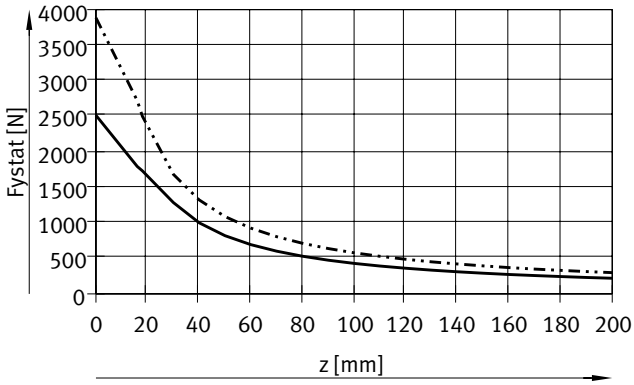

DRRD-25
DRRD-32

Size 35/40

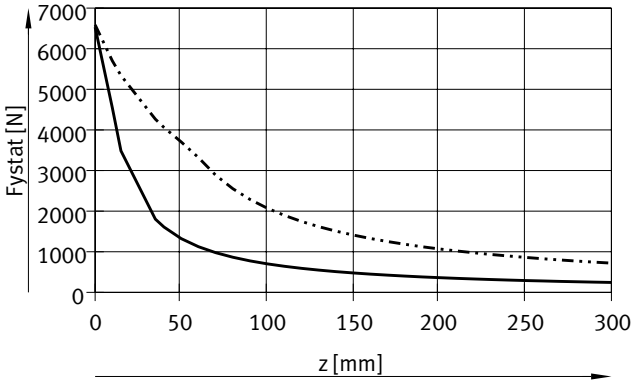

DRRD-35
DRRD-40

Size 50/63

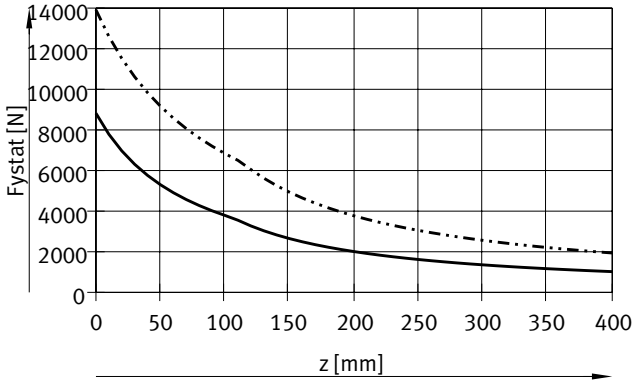

DRRD-50
DRRD-63

Data sheet

Max. static load capacity at the flange shaft

The zero point for dimension Z is always the flange level of the basic drive, independently of the attachments (flange module).

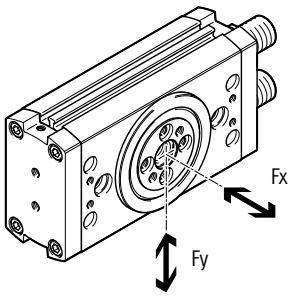

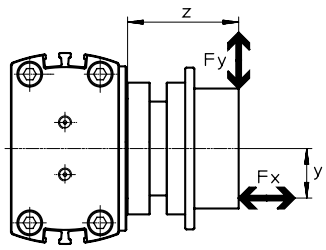

The following equation applies to combined loads (axial and radial):

$$\frac{F_{y\,(z)}}{F_{y\,max.\,(z)}} + \frac{F_{x\,(y)}}{F_{x\,max.\,(y)}} \leq 1$$

Max. static axial force F_x as a function of distance y

Size 16/20

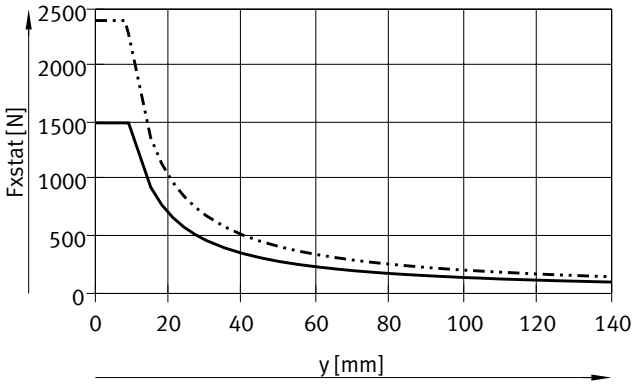

DRRD-16
DRRD-20

Size 25/32

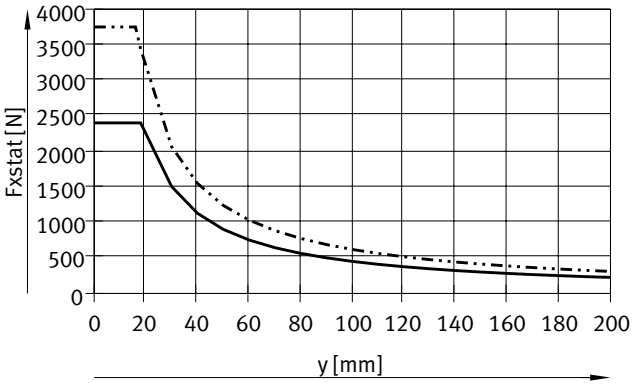

DRRD-25
DRRD-32

Size 35/40

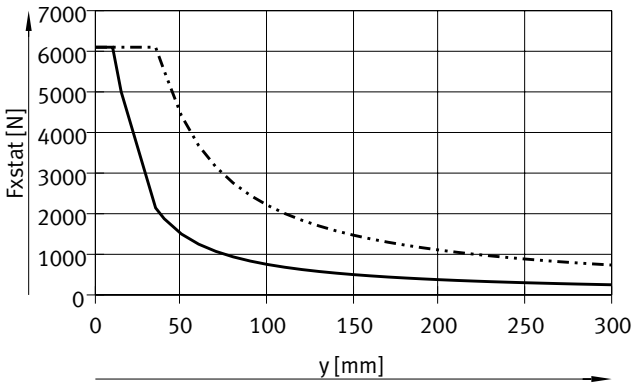

DRRD-35
DRRD-40

Size 50/63

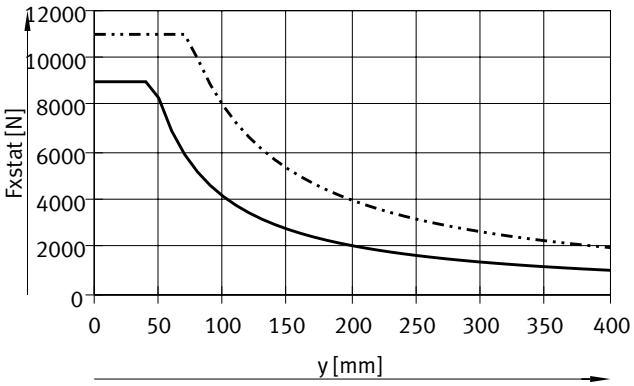

DRRD-50
DRRD-63

Data sheet

Max. load capacity on the drive shaft (DARF-Q11)

Max. radial forces F_y / axial forces F_x / bending moment M

- For the radial forces F_y, the limits of the flange shaft ➔ page 32/34 and max. bending moment of the drive shaft apply ➔ table below.
- The bending moment represents the load limit of the drive shaft and must not be exceeded.
- The zero point for dimension z is always the flange level of the basic drive, independently of the attachments (flange module).
- The axial force represents an additional load.

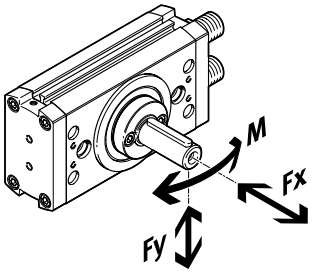

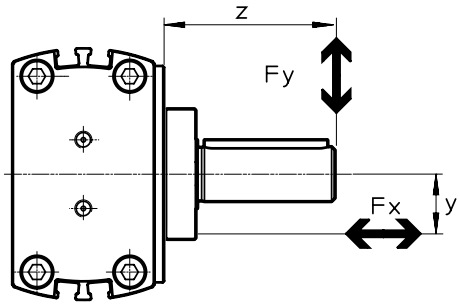

Size		16	20	25	32	35	40
Axial force F_x	[N]	625	625	625	900	900	2400
Bending moment M	[Nm]	13.5	14.4	34.4	63	63	84

Data sheet

Energy through-feed
DRRD-...-P...E...

Function

The energy through-feed can be used to transfer electrical signals or compressed air through the hollow shaft.

Advantages

- Fast and easy supply of the parts connected to the flange (e.g. gripper)
- Tubing and electrical cables are not damaged by the rotation
- Two variants available:
  - Pneumatic
  - Pneumatic and electrical
- Different number of connections depending on the size

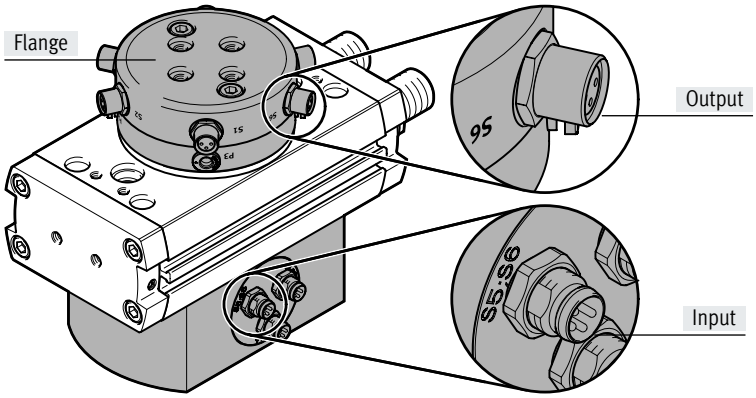

Note
Only connecting cables with straight connectors can be used (➔ page 64).

Technical data							
Size		16/20		25/32/35		40/50/63	
Variant		Pneumatic	Pneumatic/ electrical	Pneumatic	Pneumatic/ electrical	Pneumatic	Pneumatic/ electrical
Order code		P2	P2E2	P4	P4E6	P8	P8E8
Pneumatic							
Number of pneumatic ducts		2	2	4	4	8	8
Tubing O.D.		4					
Operating pressure per duct	[bar]	–0.85 ... 8					
Connection		M5					
Flow rate per duct	[l/min]	86				33	
Electric							
Number of electrical signals		–	2	–	6	–	8
Rated voltage	[V DC]	–	30	–	30	–	30
Max. current[1)]	[A]	1.5					
Connection		M8				M12	

1) The positive and negative lines of all electrical connections are connected together. The combined maximum peak current for this common positive and negative line is also 1.5 A.

Note
Also approved for vacuum operation.

Data sheet

DRRD-…-P…E… – Energy through-feed

Pin allocation
Size 16/20

Input Plug M8				Output M8 socket			
Designation	Signals	Pin[1]	Circuit diagram	Circuit diagram	Pin[1]	Signals	Designation
S1	+ – Sig 1	1 3 4			1 3 4	+ – Sig 1	S1
S2	+ – Sig 2	1 3 4			1 3 4	+ – Sig 2	S2

1) Pin 1 (+) and Pin 3 (-) are connected to each other between plugs S1 and S2. Unused plugs and sockets should therefore be protected with the cover caps.

Size 25/32/35

Input Plug M8				Output M8 socket			
Designation	Signals	Pin[1]	Circuit diagram	Circuit diagram	Pin[1]	Signals	Designation
S1;S2	+ Sig 2 – Sig 1	1 2 3 4			1 3 4	+ – Sig 1	S1
					1 3 4	+ – Sig 2	S2
S3;S4	+ Sig 4 – Sig 3	1 2 3 4			1 3 4	+ – Sig 3	S3
					1 3 4	+ – Sig 4	S4
S5;S6	+ Sig 6 – Sig 5	1 2 3 4			1 3 4	+ – Sig 5	S5
					1 3 4	+ – Sig 6	S6

1) Pin 1 (+) and Pin 3 (-) are connected to each other between plugs S1 … S6. Unused plugs and sockets should therefore be protected with the cover caps.

Data sheet

DRRD-…-P…E… – Energy through-feed

Size 40/50/63

Input M12 plug				**Output** M12 socket			
Designation	Signals	Pin[1]	Circuit diagram	Circuit diagram	Pin[1]	Signals	Designation
S1;S2	+ Sig 2 – Sig 1	1 2 3 4	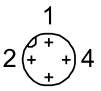		1 2 3 4	+ Sig 2 – Sig 1	S1;S2
S3;S4	+ Sig 4 – Sig 3	1 2 3 4	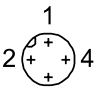		1 2 3 4	+ Sig 4 – Sig 3	S3;S4
S5;S6	+ Sig 6 – Sig 5	1 2 3 4	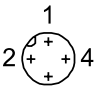		1 2 3 4	+ Sig 6 – Sig 5	S5;S6
S7;S8	+ Sig 8 – Sig 7	1 2 3 4	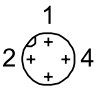		1 2 3 4	+ Sig 8 – Sig 7	S7;S8

1) Pin 1 (+) and Pin 3 (-) are connected to each other between plugs S1 … S8. Unused plugs and sockets should therefore be protected with the cover caps.

Data sheet

Intermediate position
DRRD-...-PS1

Function

The intermediate-position module enables an additional position to be set, at half of the nominal rotation angle (90°).
A piston with two screwed-in guide systems is supplied with compressed air and moves the gear racks of the unpressurised semi-rotary drive until both pistons rest on the plungers positioned in the guide systems and are held in this position. The movement is cushioned using a shock absorber.

To move to the other end position, the semi-rotary drive is pressurised with compressed air. The piston of the basic drive thus moves the entire intermediate-position piston back into its initial position.

Characteristics

- Setting range: 90° ±10°
- Cushioning variants: P, Y9
- Can be approached and travelled through from both end positions
- Position sensing of the intermediate position possible

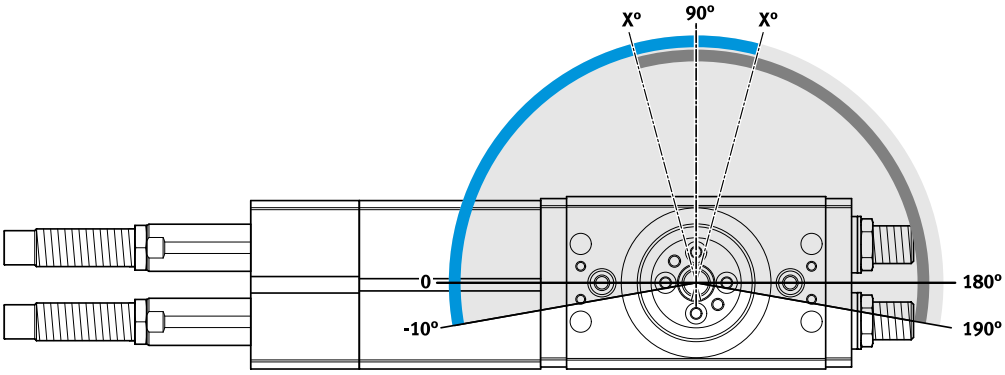

Setting the swivel speed

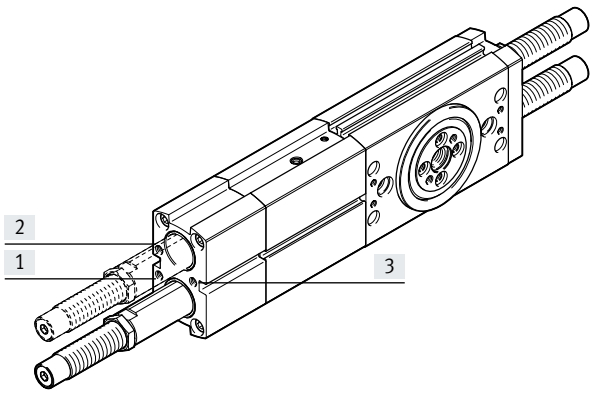

Semi-rotary drive and intermediate-position module must only be operated with controlled air flow. The flow control should be connected as close as possible to the semi-rotary drive (e.g. one-way flow control valve GRLA-...) ➔ page 65.
In the event of pressure failure, the payload may hit an end position in an uncontrolled manner. In order to prevent this, piloted check valves HGL or an air reservoir VZS are recommended ➔ page 65.
The following movements are adjusted using the supply ports [1] and [2]: end position ➔ intermediate position
Both directions can be adjusted separately from each other.
The following movement is adjusted via supply port [3]:
Intermediate position ➔ end position
Both directions are set simultaneously.

Data sheet

DRRD-...-PS1 – Intermediate position

Swivel angle adjustment

By pushing the shock absorber as far as the stop, the flange shaft of the semi-rotary drive rotates into the intermediate position.
In delivered state, the intermediate position is set to 90°. By screwing in or unscrewing the shock absorbers, the swivel angle can be adjusted by ±10°.
If the setting dimension X_{max} is exceeded, the shock absorber can no longer completely cushion the movement.
If the setting dimension X_{min} is not reached, the shock absorber not only cushions the intermediate position, but also the end position of the semi-rotary drive.

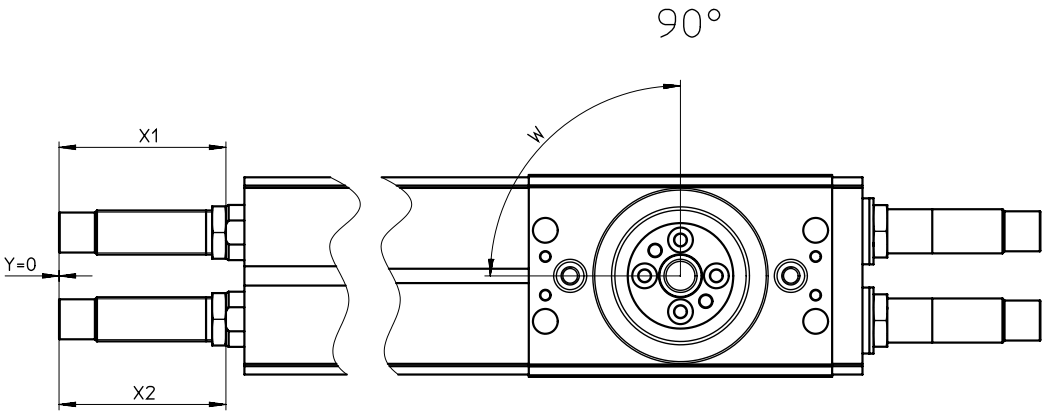

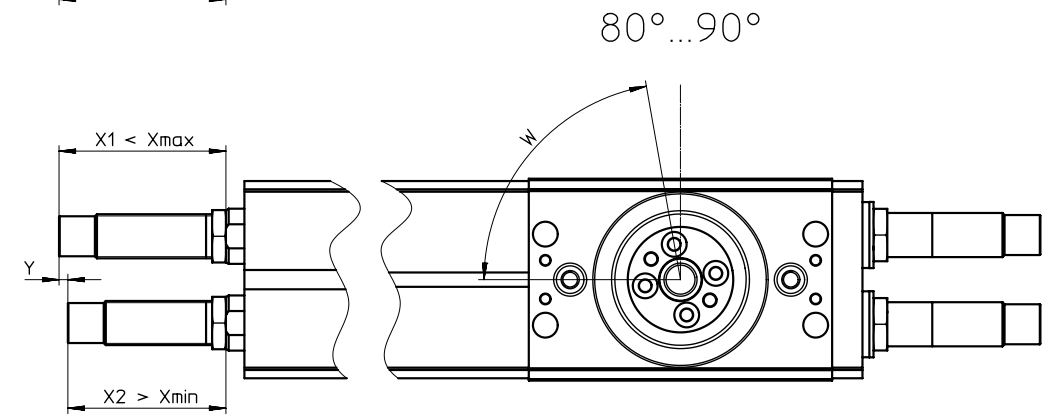

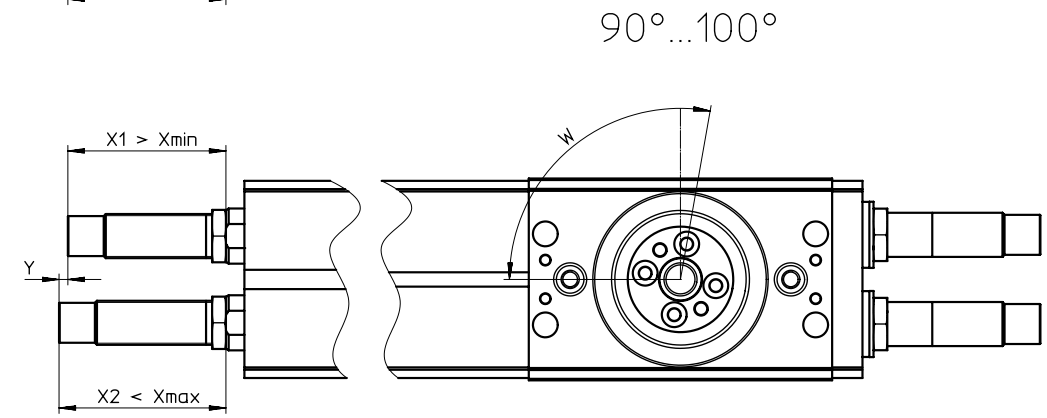

Size		16	20	25	32	35	40	50
Setting dimension X								
DRRD-...-P								
X_{min}	[mm]	7.7	14.9	14.2	12.5	–	–	–
X_{max}	[mm]	10.1	17.8	20.6	23.2	–	–	–
DRRD-...-Y9								
X_{min}	[mm]	29.6	41.8	56.9	70.3	88.6	86.7	114
X_{max}	[mm]	32	44.5	60.4	78.5	96.2	92.7	128
Dimension Y for 10° change in the swivel angle	[mm]	2.3	2.4	3.2	3.7	3.7	5.6	8

Data sheet

DRRD-...-PS1 – Intermediate position

Control variants

Circuit diagram | Control sequence

[1] With 1x 5/3-way valve and 1x 3/2-way valve

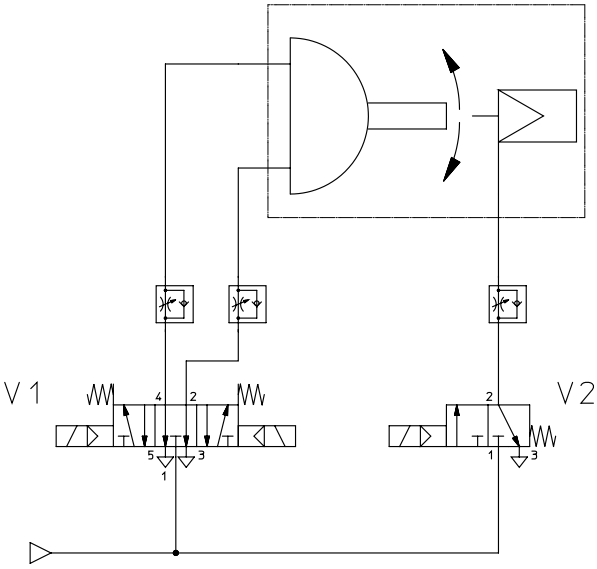

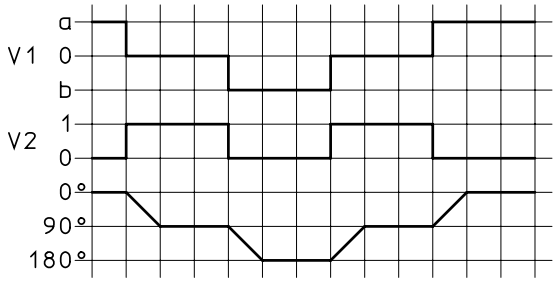

[2] With 3x 3/2-way valves

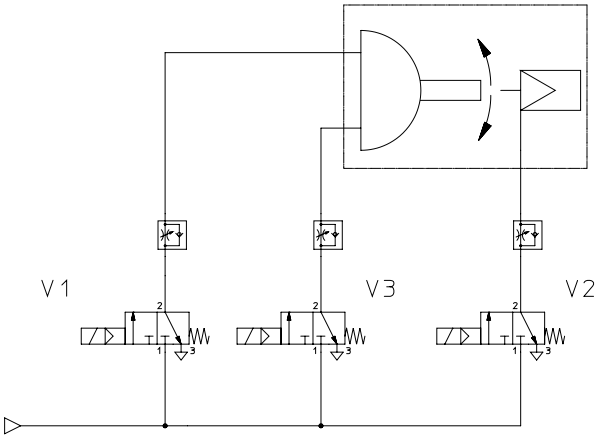

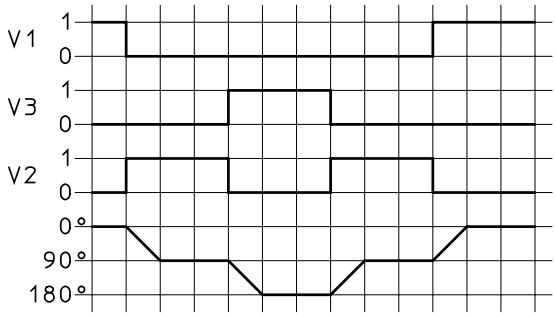

[3] With 1x 5/3-way valve and 3x 3/2-way valve

The exhaust air flow control valves for the basic drive can be adjusted separately here.

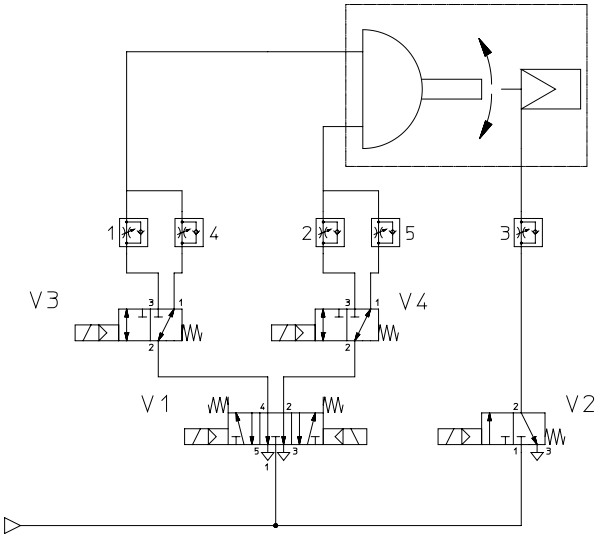

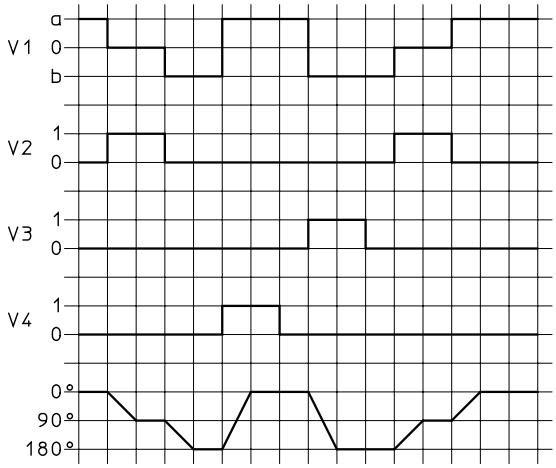

Data sheet

DRRD-...-PS1 – Intermediate position
Max. permissible mass moment of inertia J at the flange shaft as a function of swivel time t
(at room temperature and an operating pressure of 6 bar)

Size 16

End position to intermediate position

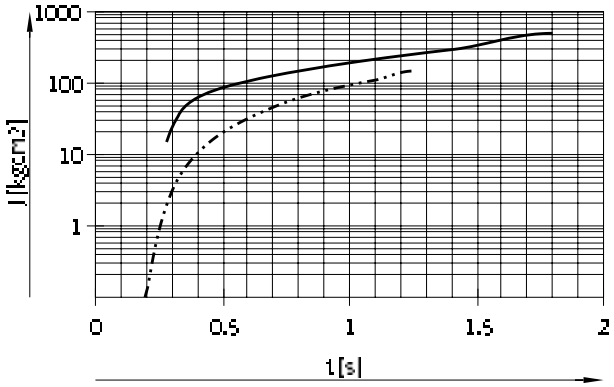

Ranges
DRRD-16-...-Y9-PS1 → 15 ... 500 kgcm²
DRRD-16-P-PS1 → 0 ... 150 kgcm²

Intermediate position to end position

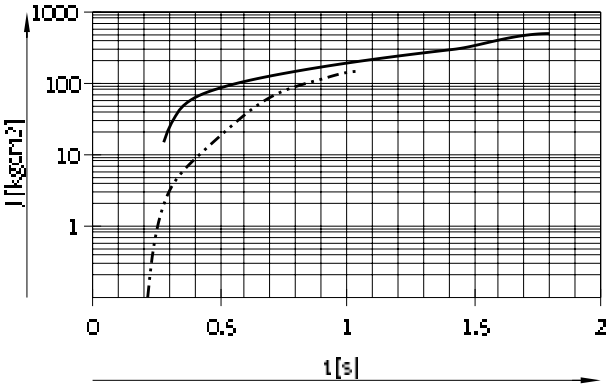

Ranges
DRRD-16-...-Y9-PS1 → 15 ... 500 kgcm²
DRRD-16-P-PS1 → 0 ... 150 kgcm²

Size 20

End position to intermediate position

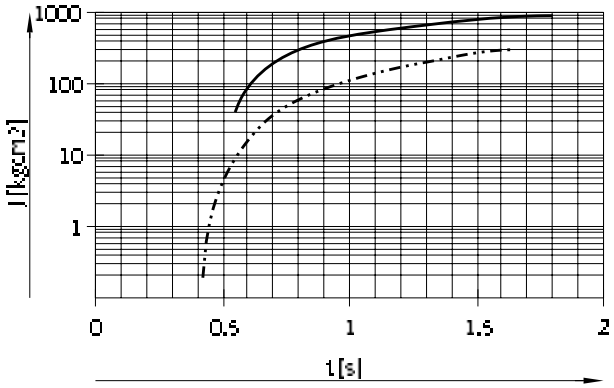

Ranges
DRRD-20-...-Y9-PS1 → 40 ... 900 kgcm²
DRRD-20-P-PS1 → 0 ... 300 kgcm²

Intermediate position to end position

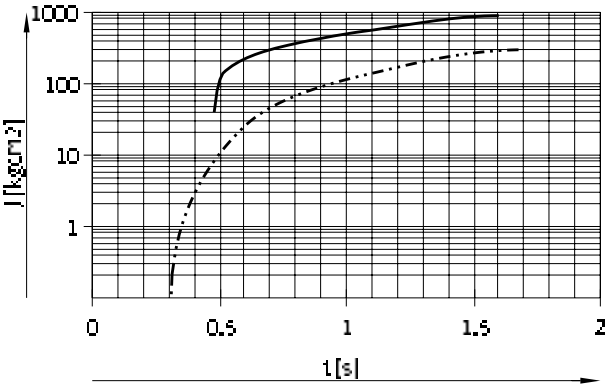

Ranges
DRRD-20-...-Y9-PS1 → 40 ... 900 kgcm²
DRRD-20-P-PS1 → 0 ... 300 kgcm²

Size 25

End position to intermediate position

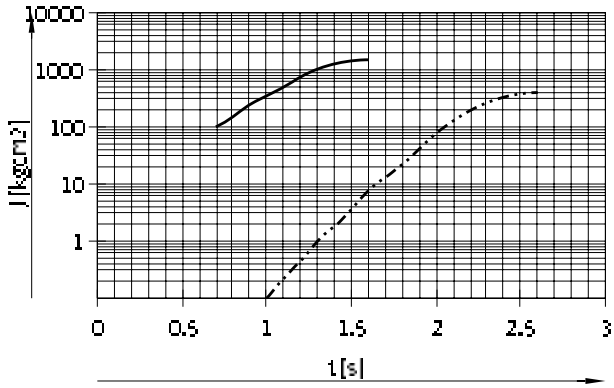

Ranges
DRRD-25-...-Y9-PS1 → 100 ... 1500 kgcm²
DRRD-25-P-PS1 → 0 ... 400 kgcm²

Intermediate position to end position

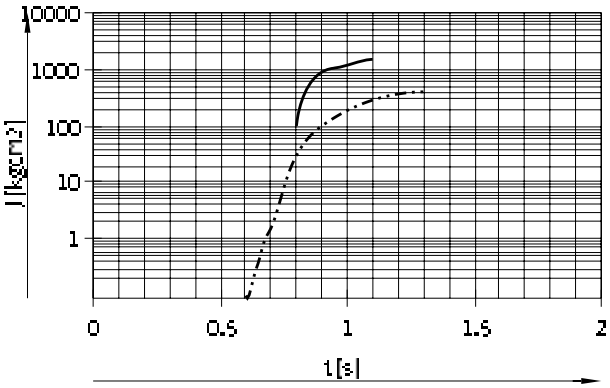

Ranges
DRRD-25-...-Y9-PS1 → 100 ... 1500 kgcm²
DRRD-25-P-PS1 → 0 ... 400 kgcm²

Data sheet

DRRD-...-PS1 – Intermediate position
Max. permissible mass moment of inertia J at the flange shaft as a function of swivel time t
(at room temperature and an operating pressure of 6 bar)

Size 32

End position to intermediate position

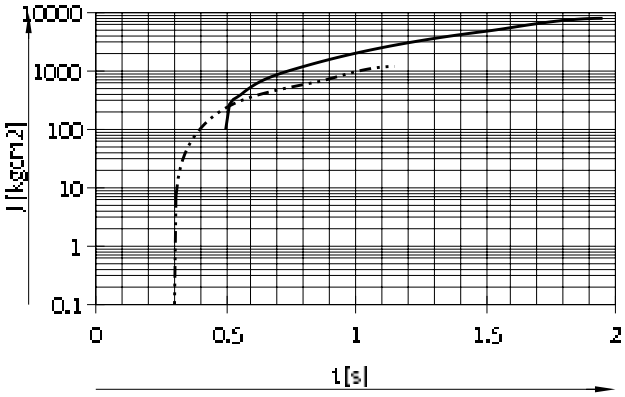

Ranges

DRRD-32-...-Y9-PS1 → 100 ... 8000 kgcm²

DRRD-32-P-PS1 → 0 ... 500 kgcm²

Intermediate position to end position

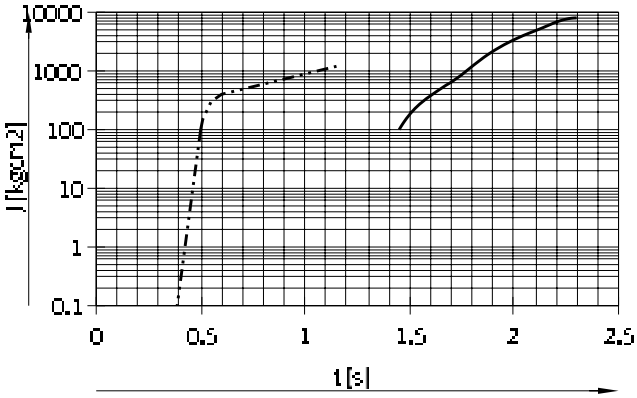

Ranges

DRRD-32-...-Y9-PS1 → 100 ... 8000 kgcm²

DRRD-32-P-PS1 → 0 ... 500 kgcm²

Size 35

End position to intermediate position

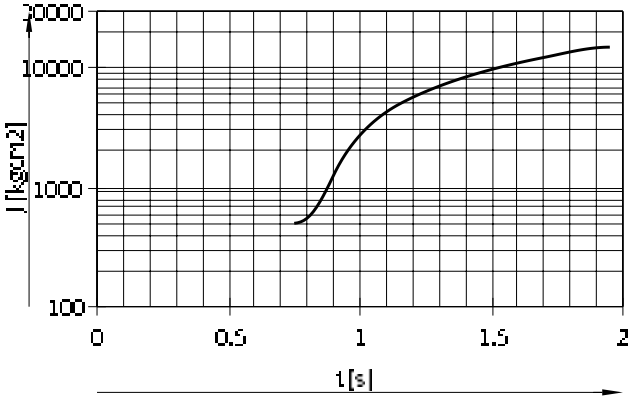

Ranges

DRRD-35-...-Y9-PS1 → 500 ... 15000 kgcm²

Intermediate position to end position

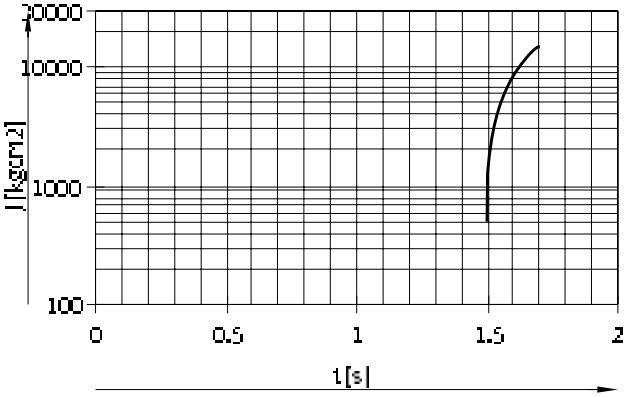

Ranges

DRRD-35-...-Y9-PS1 → 500 ... 15000 kgcm²

Data sheet

DRRD-...-PS1 – Intermediate position
Max. permissible mass moment of inertia J at the flange shaft as a function of swivel time t
(at room temperature and an operating pressure of 6 bar)

Size 40

End position to intermediate position

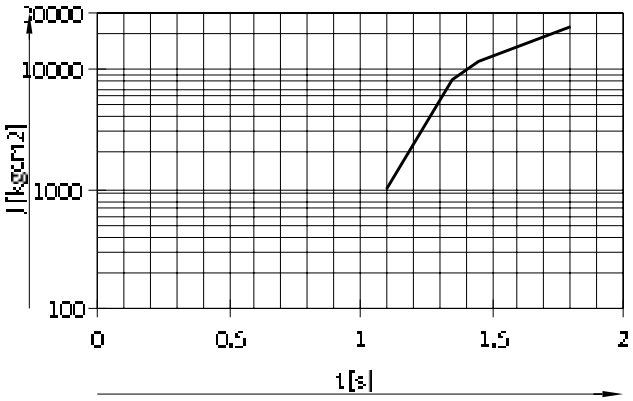

Ranges
➔ 1000 ... 23000 kgcm²

DRRD-40-...-Y9-PS1

Intermediate position to end position

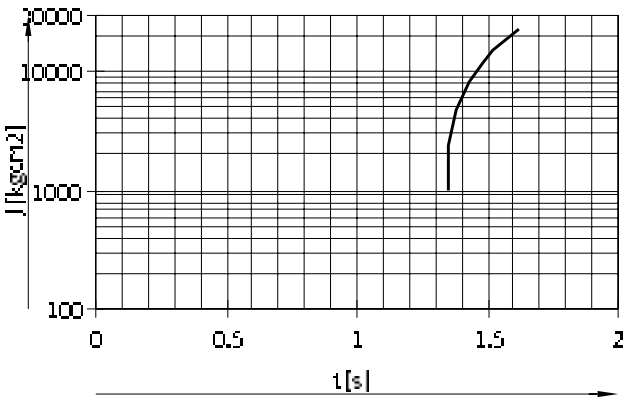

Ranges
➔ 1000 ... 23000 kgcm²

DRRD-40-...-Y9-PS1

Size 50

End position to intermediate position

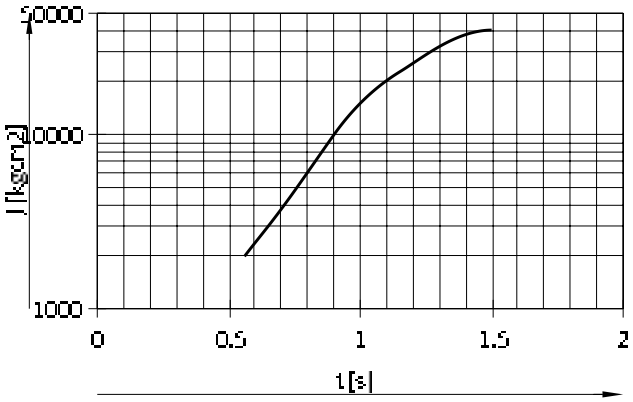

Ranges
➔ 2000 ... 40000 kgcm²

DRRD-50-...-Y9-PS1

Intermediate position to end position

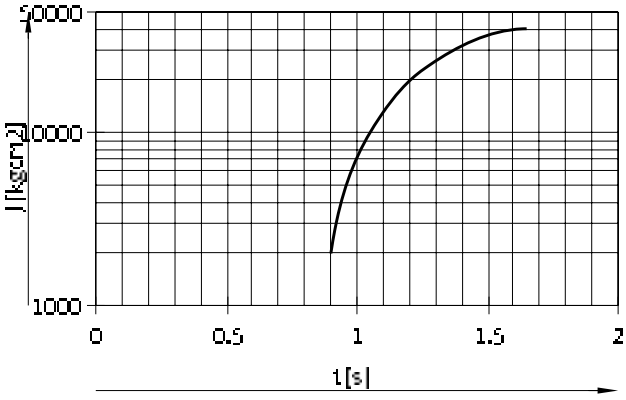

Ranges
➔ 2000 ... 40000 kgcm²

DRRD-50-...-Y9-PS1

Data sheet

Dimensions Download CAD data ➔ www.festo.com

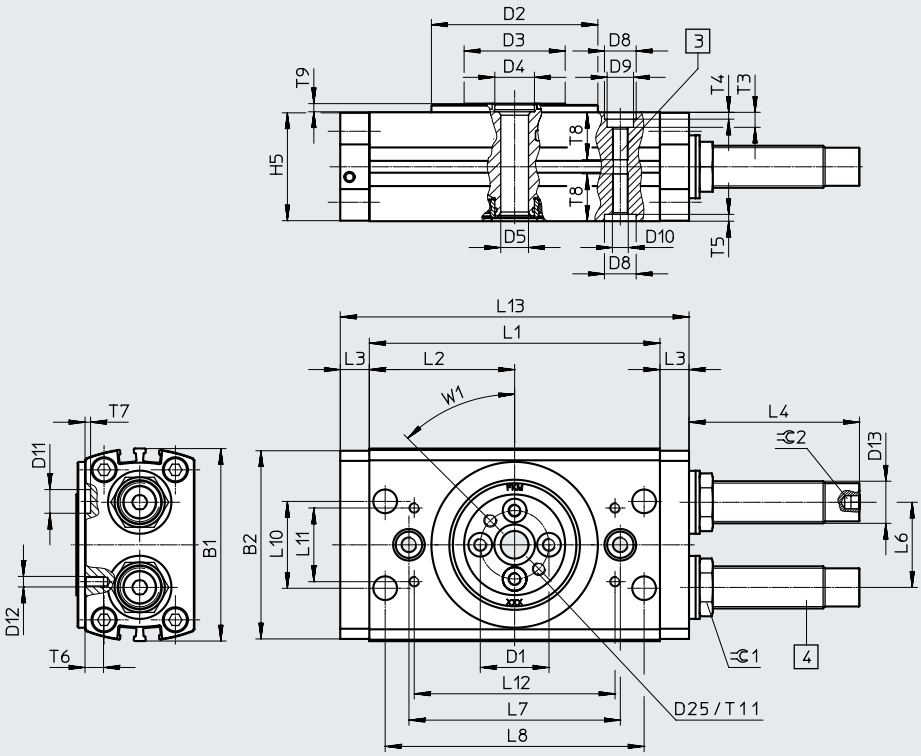

DRRD-32 ... -40

DRRD- ... -P

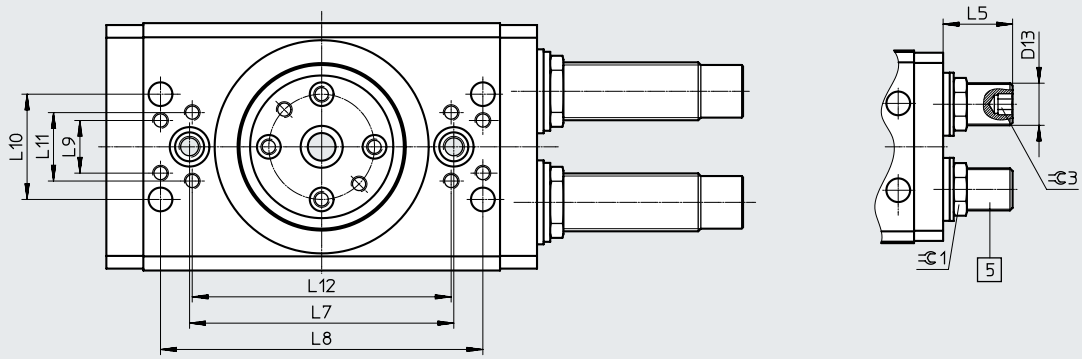

DRRD-50/63

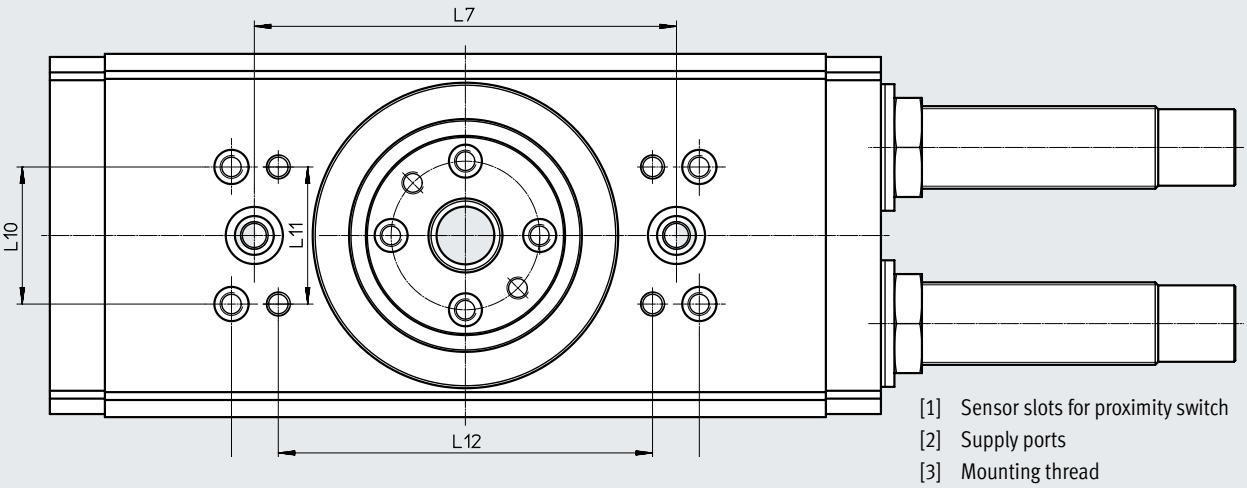

The semi-rotary drive must only be operated with controlled air flow. The flow control should be connected as close as possible to the semi-rotary drive (e.g. one-way flow control valve GRLA-...) ➔ page 65.

Illustrated position of the flange shaft corresponds to the mid-position (swivel angle 90°).

[1] Sensor slots for proximity switch
[2] Supply ports
[3] Mounting thread
[4] Shock absorber (DRRD-...-Y9/-Y10/-Y14)
[5] Cushioning elements (DRRD-...-P)

Data sheet

Size	B1 ±0.25	B2	D1 Ø ±0.025	D2 Ø +0/–0.05	D3 Ø	D4 Ø H7	D5 Ø +0.15/–0.05	D6 Ø H7	D7	D8 Ø H7	D9 Ø	D10
16	58	56.2	21	50	32	12	8	7	M4	9	8	M5
20	65	63.4	24	56	34.9	12	8	7	M4	9	8	M5
25	73.2	71.5	26	63	38.25	15	10.5	9	M5	12	10	M6
32	94	92.6	40	81	54.2	15	10.5	9	M6	15	11	M8
35	106	104	45	91	59.9	25	10.5	9	M6	15	11	M8
40	113	111	45	91	59.9	25	21	9	M6	15	14	M10
50	132	129.9	54	110	73	25	21	12	M8	15	14	M10
63	159	157	63	135	82.8	25	21	15	M10	25	17	M12

Size	D11 Ø H7	D12	D13	D25	H1 ±0.1	H2 +0.2/–0.1	H3 +0.3/–0.2	H4 ±0.1	H5	L1 ±0.1	L2	L3 ±0.1
16	7	M3	M10x1	M4	33	35.6	2.6	0.5	32.6	84	42	10.5
20	9	M4	M12x1	M5	36	39.6	3.6	0.5	35.6	86	43	11
25	9	M4	M16x1	M5	41.4	44.7	3.3	0.5	41	110	55	11
32	9	M6	M22x1.5	M6	50	55.5	5.5	1	49.6	135	67.5	14
35	9	M6	M26x1.5	M6	63	67	4	1	62.2	148	74	15
40	9	M6	M26x1.5	M6	68	72	4	1	67.2	199	99.5	15
50	15	M8	M30x1.5	M8	78	83	5	1	77.2	262	131	20
63	15	M10	M37x1.5	M10	100	107	7	2	99.2	335	167.5	25

Size	L6	L7 ±0.02	L8 ±0.2	L9 ±0.15	L10 ±0.02	L11 ±0.15	L12 ±0.2	L13	L14	L15	T1	T2 +0.1
16	23.2	64	74	–	26	22	61	105	20	16.3	5.6	1.6
20	26	70	74	–	33	14	80	108	20	17.8	6	1.6
25	32.25	80	98	–	33	14	98	132	20	20.5	6.6	2.1
32	42.2	100	122	20	40	26	98	163	30	24.8	8	2.1
35	49.6	120	130	44	26	44	105	178	42	31.1	8	2.1
40	56	120	130	44	26	44	105	229	42	33.6	8	2.1
50	64	160	160	34	34	54	132	302	50	39	10.6	2.6
63	78	170	190	60	60	60	149	385	50	49.6	14	3.1

Size	T3	T4 +0.1	T5 +0.1	T6	T7 +0.1	T8	T9 +0.1	T11	EE	W1	⊂ 1	⊂ 2	⊂ 3
16	4.7	2.1	2.1	6.3	1.6	15	2.6	5.6	M5	45°	13	3	5
20	4.7	2.1	2.1	6.3	2.1	15	2.6	5.6	M5	45°	15	4	6
25	5.7	2.6	2.6	7	2.1	18	3.1	5.5	M5	45°	19	5	8
32	6.5	3.1	3.1	7.8	2.1	23.1	3.1	8	G1/8	45°	27	5	10
35	6.5	3.1	3.1	8.5	2.1	22.6	3.5	8	G1/8	45°	32	6	10
40	8.6	3.1	3.1	9	2.1	32	3.5	8	G1/8	45°	32	6	10
50	8.6	3.1	3.1	10.5	3.1	30	3.5	10	G1/4	45°	36	8	–
63	11	3.5	3.5	14	3.1	40	3.5	14	G3/8	45°	46	8	–

Size	Dimension with 180° swivel angle		Swivel angle adjustment range		
	L4	L5	L4 min./max.	L5 min./max.	1 mm = …°
16	37	17.6	–20/+1.5	–12/+1.4	8.7
20	41.8	18	–21.1/+1.5	–11/+1.4	9
25	63	24.3	–28.9/+1.9	–15/+1.8	6.6
32	78.3	29.5	–34.7/+2.4	–19/+2.3	5.6
35	97.5	40.9	–34.7/+2.4	–27/+2.3	5.6
40	98.2	41.6	–53/+3.2	–28/+3.1	3.6
50	126	–	–74.5/+4.4	–	2.6
63	120	–	–71.7/+7.1	–	1.9

Data sheet

Dimensions – Variants Download CAD data ➔ www.festo.com

P... – Energy through-feed, pneumatic

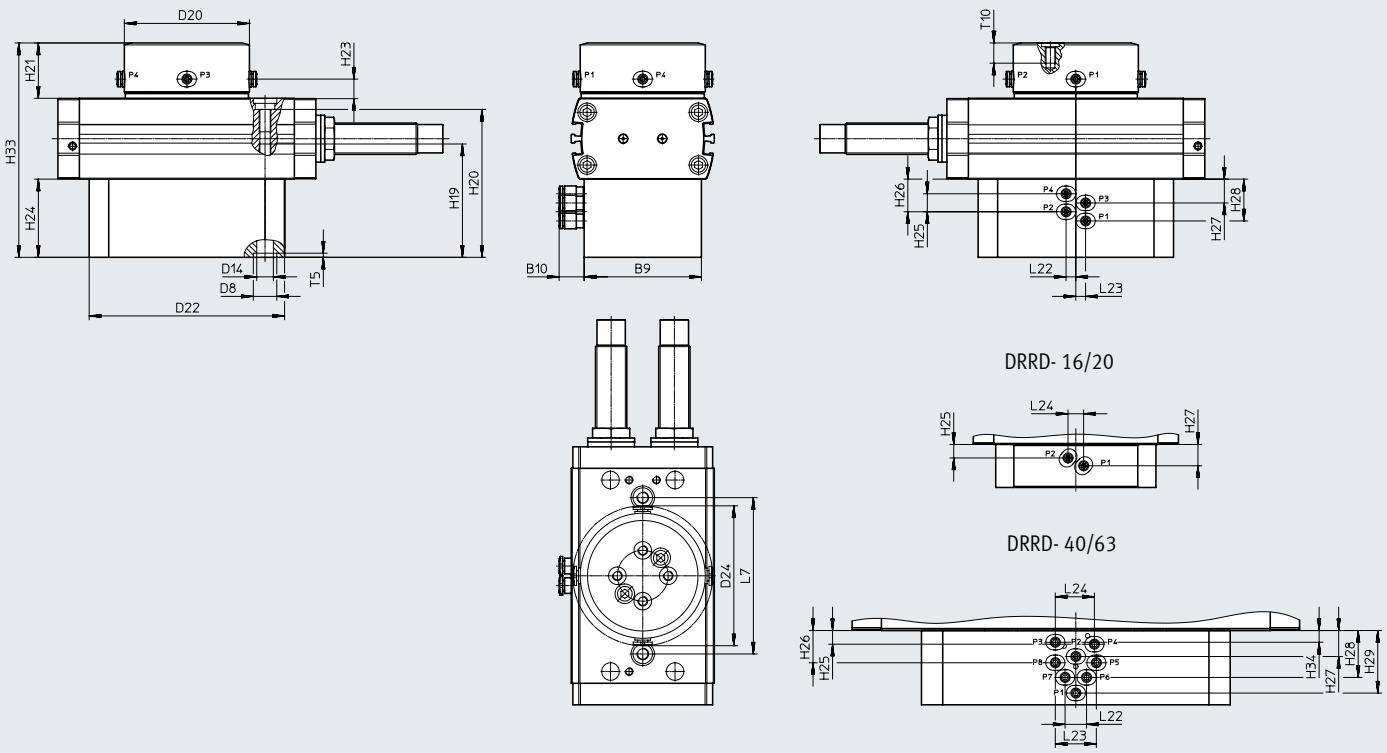

Size	B9	B10	D8 Ø H7	D14 Ø	D20 Ø	D22 Ø
16	52	13.4	9	6	54	82
20	58	13.4	9	6	54	82
25	60	12.8	12	6.5	64	100
32	70	12.8	15	8.5	64	120
35	80	12.8	15	8.5	64	138
40	80	13.4	15	11	89	158
50	80	13.4	15	11	89	190
63	80	13.4	25	13	89	210

Size	D24 Ø	H19	H20	H21	H23	H24
16	70	43	56.4	16.6	7.6	22
20	70	43	59.3	17.6	8.6	22
25	71.6	57	74.7	28.3	9.8	40
32	71.6	62	82.4	31.5	12	40
35	71.6	61.6	95.5	30	10.5	40
40	96.9	70	97.4	21	10.5	38
50	96.9	68	107.4	24	11.5	38
63	96.9	78	127	29	13.5	38

Data sheet

Size	H25	H26	H27	H28	H29	H33	H34
16	6.9	–	10.9	–	–	71.6	–
20	6.9	–	10.9	–	–	75.6	–
25	7.5	16.7	12.2	21.4	–	109.7	–
32	7.5	16.7	12.2	21.4	–	121.5	–
35	7.5	16.7	12.2	21.4	–	133	–
40	7	16.5	13.3	24	32	127	6
50	7	16.5	13.3	24	32	140	6
63	7	16.5	13.3	24	32	167	6

Size	L7 ±0.02	L22	L23	L24	T5 +0.1	T10
16	64	4	4	8	2.1	8.6
20	70	4	4	8	2.1	8.6
25	80	5	5	–	2.1	9.6
32	100	5	5	–	3.1	11.1
35	120	5	5	–	3.1	11.1
40	120	11	21	20	3.1	10.1
50	160	11	21	20	3.1	14.6
63	170	11	21	20	3.5	17.1

Data sheet

Dimensions – Variants Download CAD data ➔ www.festo.com

P...E... – Energy through-feed, pneumatic/electrical

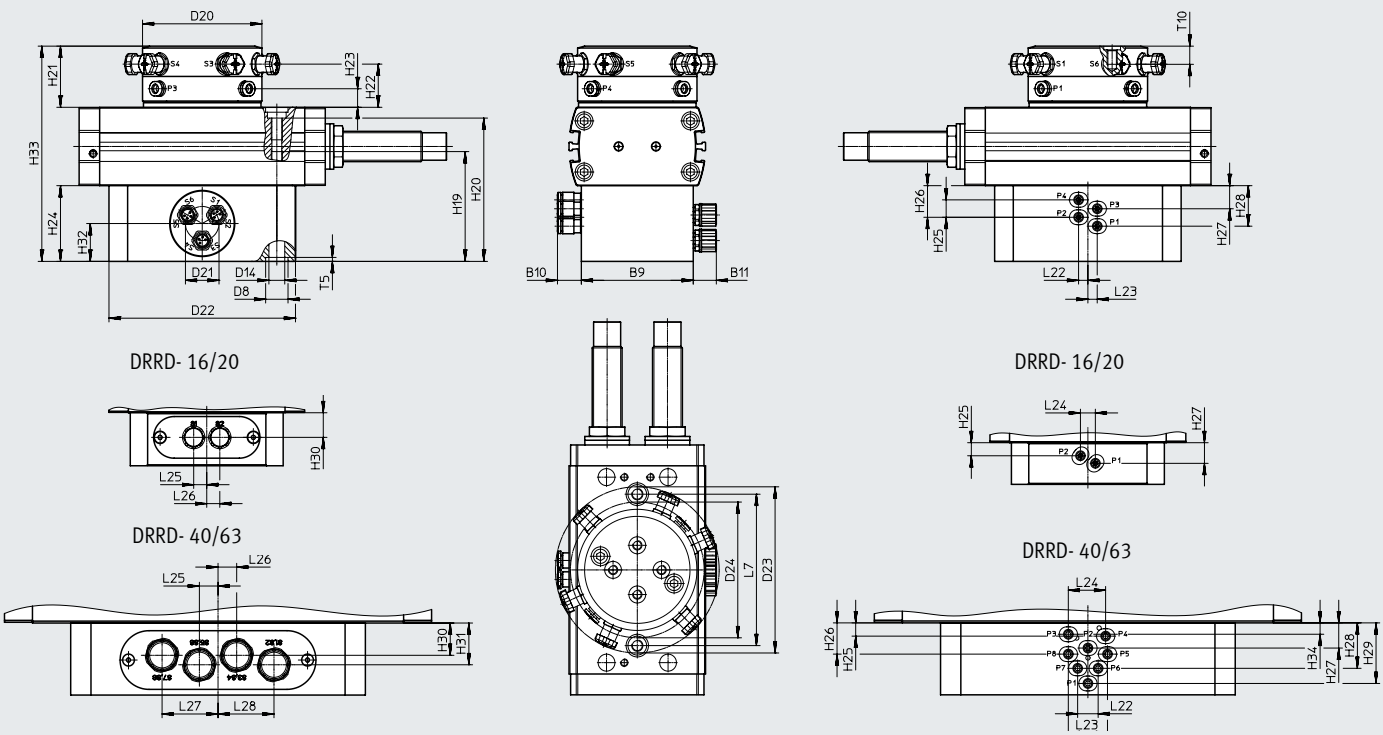

Size	B9	B10	B11	D8 ø H7	D14 ø	D20 ø	D21 ø	D22 ø
16	52	13.4	8.5	9	6	54	16	82
20	58	13.4	8.5	9	6	54	16	82
25	60	12.8	12.4	12	6.5	64	18	100
32	70	12.8	12.4	15	8.5	64	18	120
35	80	12.8	12.4	15	8.5	64	18	138
40	80	13.4	24	15	11	89	–	158
50	80	13.4	24	15	11	89	–	190
63	80	13.4	24	25	13	89	–	210

Size	D23 ø	D24 ø	H21	H22	H23	H24	H25	H26
16	71.1	70	28.6	21.1	7.6	28	6.9	–
20	71.1	70	29.6	22.1	8.6	28	6.9	–
25	89.8	71.6	32.3	22.8	9.8	40	7.5	16.7
32	89.8	71.6	34.5	25	12	40	7.5	16.7
35	89.8	71.6	33	23.5	10.5	40	7.5	16.7
40	138.5	96.9	40	28.5	10.5	38	7	16.5
50	138.5	96.9	44	32.5	11.5	38	7	16.5
63	138.5	96.9	48	36.5	13.5	38	7	16.5

Data sheet

Size	H27	H28	H29	H30	H31	H32	H33	H34	L7 ±0.02
16	10.9	–	–	15.5	–	–	89.6	–	64
20	10.9	–	–	15.5	–	–	93.6	–	70
25	12.2	21.4	–	–	–	20	113.7	–	80
32	12.2	21.4	–	–	–	20	124.5	–	100
35	12.2	21.4	–	–	–	20	136	–	120
40	13.3	24	32	17	22	–	146	6	120
50	13.3	24	32	17	22	–	160	6	160
63	13.3	24	32	17	22	–	186	6	170

Size	L22	L23	L24	L25	L26	L27	L28	T5 +0.1	T10
16	4	4	8	7	7	–	–	2.1	8.6
20	4	4	8	7	7	–	–	2.1	8.6
25	5	5	–	–	–	–	–	2.1	9.6
32	5	5	–	–	–	–	–	3.1	11.1
35	5	5	–	–	–	–	–	3.1	11.1
40	11	21	20	10	10	30	30	3.1	10.1
50	11	21	20	10	10	30	30	3.1	14.6
63	11	21	20	10	10	30	30	3.5	17.1

Data sheet

Dimensions – Variants Download CAD data ➔ www.festo.com

Y12 – With external shock absorber

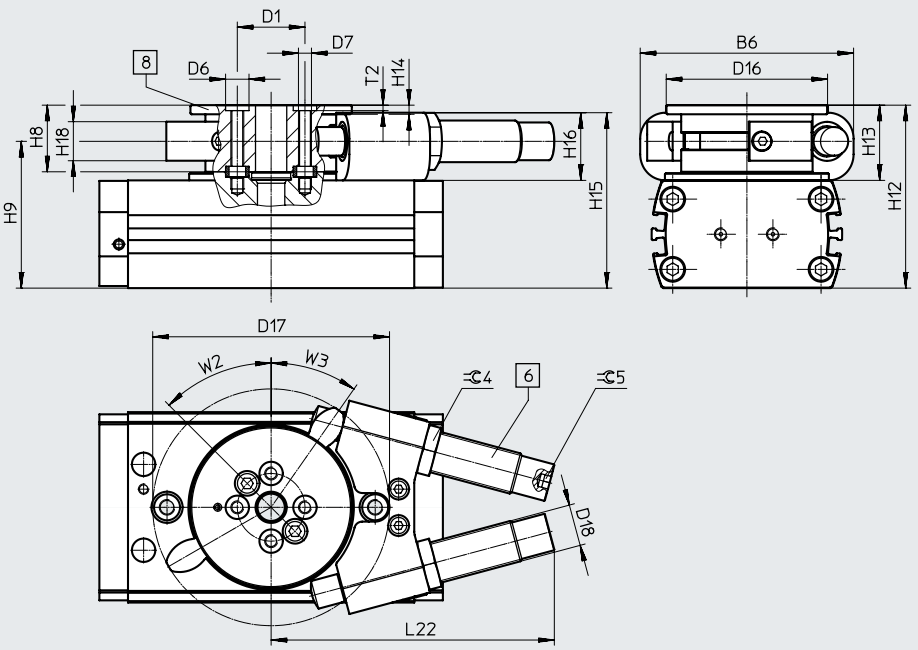

[6] Shock absorber
[8] Flange module

Size	B6 ±0.2	D1 ø ±0.025	D6 ø H7	D7	D16 ø	D17	D18	H8 ±0.1	H9	H12
16	58	21	7	M4	49	69.4	M10x1	17	43.1	52.6
20	75	24	7	M4	62	91	M12x1	25.6	51.2	65.2
25	82	26	9	M5	62	91	M16x1	25.6	56.5	70.3
32	120	40	9	M6	79	126.2	M22x1.5	31.5	68.5	87
35	133	45	9	M6	89	146.7	M22x1.5	34	83	101
40	133	45	9	M6	89	146.7	M22x1.5	34	88	106
50	152	54	12	M8	110	165.2	M26x1.5	42	101.5	125
63	186	63	15	M10	130	212.2	M30x1.5	52	129.5	159

Size	H13	H14	H15	H16	H18	L22 max.	T2 +0.1	W2	W3	⊂ 4	⊂ 5
16	19.6	3.5	51	18	10	65.2	1.6	45°	36°	13	3
20	29.2	3.5	59.5	23.5	15	85.3	1.6	45°	38°	15	4
25	28.9	3.5	67.4	26	15	108.9	2.1	45°	35°	19	5
32	37	4	85	35	22	149.7	2.1	45°	35°	27	5
35	38	5	99	36	21	155.5	2.1	45°	38°	27	5
40	38	5	104	36	21	155.5	2.1	45°	38°	27	5
50	47	6	123	45	30	171.6	2.6	45°	33°	32	6
63	59	6	155.5	55.5	36	228	3.1	45°	36°	36	8

Data sheet

Dimensions – Variants Download CAD data ➔ www.festo.com

PS1 – Intermediate position

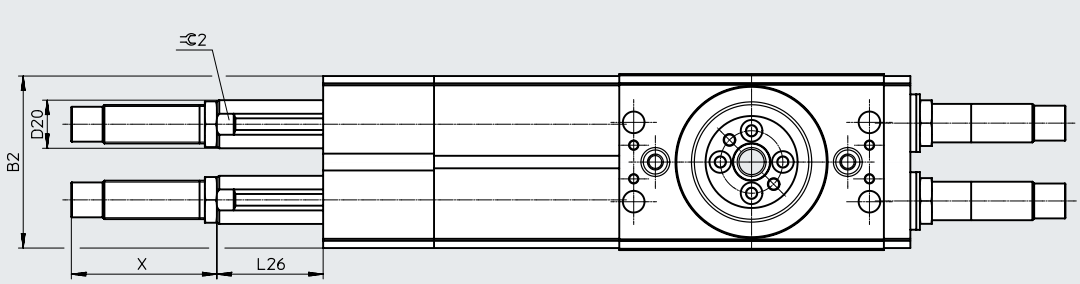

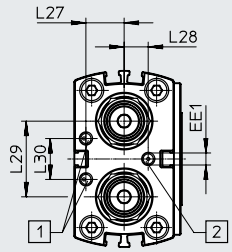

Size 40 and 50

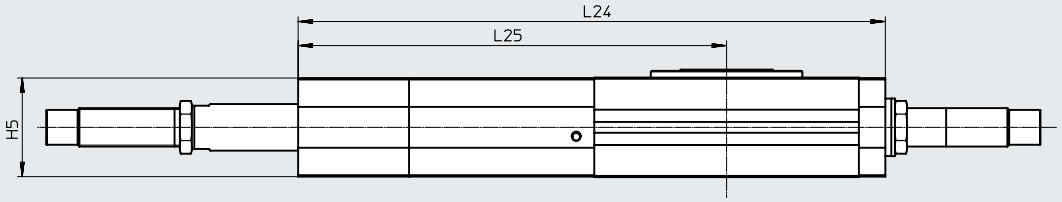

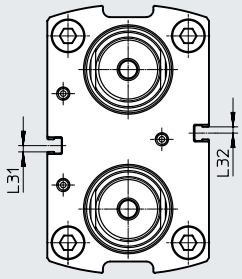

Dimensions for X ➔ page 41

[1] Supply ports to rotate basic drive

[2] Supply port to rotate into intermediate position

Size	B2	H5	L24	L25	L26 min.	L26 max.	L27
16	56.2	32.6	193.1	140.6	0.3	21.5	12
20	63.4	35.6	205.1	151.1	4.5	28.4	14
25	71.5	41	244.1	178.1	14.1	44.2	15.9
32	92.6	49.6	320.1	238.6	3.4	43.5	19.5
35	104	62.2	343.1	254.1	14.8	54.5	25
40	111	67.2	392.1	277.6	9	54.1	27
50	129.9	77.2	542.6	391.6	12.3	86	30

Size	L28	L29	L30	L31	L32	D20 ⌀	EE1	⌲ 2
16	6.2	21.65	15	–	–	14	M5	12
20	9	26.25	16	–	–	16	M5	14
25	10	31.45	17	–	–	20	M5	18
32	14	38.45	16	–	–	28	M5	24
35	18	49.6	18	–	–	32	M5	27
40	14	58	38	2.6	2.6	32	M5	27
50	20	78	44	5	5	36	G1/8	32

Data sheet

Ordering data DRRD	Size	Swivel angle [°]	Part no.	Type
P – Elastic cushioning rings/plates at both ends				
	16	180	★ **1577238**	**DRRD-16-180-FH-PA**
	20		★ **1395606**	**DRRD-20-180-FH-PA**
	25		★ **1359980**	**DRRD-25-180-FH-PA**
	32		★ **1578512**	**DRRD-32-180-FH-PA**
	35		★ **1526825**	**DRRD-35-180-FH-PA**
	40		★ **1503269**	**DRRD-40-180-FH-PA**
Y9 – Linear shock absorber, self-adjusting at both ends				
	16	180	★ **1644389**	**DRRD-16-180-FH-Y9A**
	20		★ **1427379**	**DRRD-20-180-FH-Y9A**
	25		★ **1360248**	**DRRD-25-180-FH-Y9A**
	32		★ **1578518**	**DRRD-32-180-FH-Y9A**
	35		★ **1547102**	**DRRD-35-180-FH-Y9A**
	40		★ **1526986**	**DRRD-40-180-FH-Y9A**

Ordering data – Modular product system

Ordering table												
Size	16	20	25	32	35	40	50	63	Conditions	Code		Enter code
Module no.	**574399**	**574400**	**574401**	**574402**	**574403**	**574404**	**574405**	**574407**				
Function	Semi-rotary drive									**DRRD**		DRRD
Size	16	20	25	32	35	40	50	63		**-...**		
Nominal swivel angle	180°									**-180**		-180
Output shaft	Flange shaft, hollow									**-FH**		-FH
Energy through-feed	None									**–**		
	Pneumatic, 2 ducts		–							**P2**		
	Pneumatic, 2 ducts; electric, 2 signals		–							**P2E2**		
	–		Pneumatic, 4 ducts			–				**P4**		
	–		Pneumatic, 4 ducts; electric, 6 signals			–				**P4E6**		
	–					Pneumatic, 8 ducts				**P8**		
	–					Pneumatic, 8 ducts; electric, 8 signals				**P8E8**		
Cushioning	Elastic cushioning rings/plates at both ends						–			**-P**		
	Linear shock absorber, self-adjusting at both ends									**-Y9**		
	–		Linear shock absorber, self-adjusting at both ends, hard	–	Linear shock absorber, self-adjusting at both ends, hard					**-Y10**		
	Linear shock absorber, self-adjusting at both ends, external								[1] [5]	**-Y12**		
	Linear shock absorber, self-adjusting at both ends, soft						–			**-Y14**		
Position sensing	Via proximity switch									**A**		A
EU certification	None											
	II 2GD								[2]	**-EX4**		
Intermediate position	None							–				
	1 intermediate position							–	[3]	**-PS1**		
End-position locking	None											
	At both ends								[4] [5]	**-E1**		
Sensor mounting, external	None											
	Mounting rail for proximity switch								[5]	**-R**		
Version	Standard											
	Splash-proof design									**-SG**		
Operating instructions	With operating instructions											
	Without operating instructions									**-DN**		

[1] **Y12** Not with end-position locking E1 and splash-proof design SG
[2] **EX4** Not with end-position locking E1, energy through-feed P2E2, P4E6, P8E8 and intermediate position PS1
[3] **PS1** Not with cushioning Y10, Y14 and with cushioning P only for size 16 … 32
[4] **E1** Not with sensor mounting R and splash-proof design SG
[5] **Y12, E1, R** Not with energy through-feed P2, P2E2, P4, P4E6, P8, P8E8

Accessories

Drive shaft DARF-Q11
For size 12 ... 40

Material:
Tempered steel
RoHS-compliant

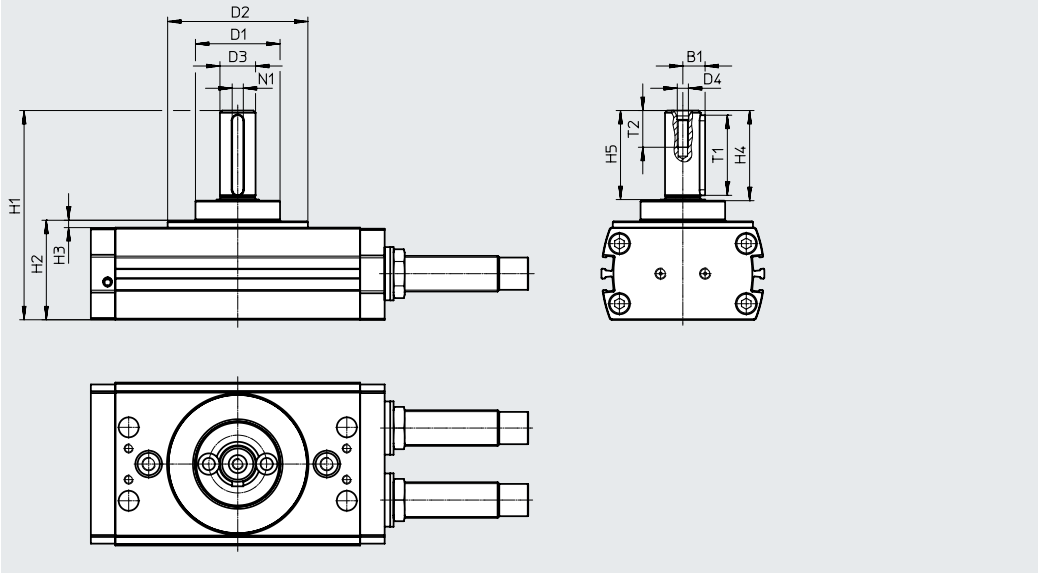

Dimensions and ordering data

For size	B1	D1	D2	D3	D4	H1	H2	H3
		ø	ø	ø				
	+0.1/–0.2	–0.2		g7				
12	4.8	30	30	8	M3	56.75±0.3	30.75±0.2	0.75+0.2/–0.6
16	6.2	32	50_{h7}	10	M3	66.1+0.3/–0.2	35.6+0.2/–0.1	2.6+0.3/–0.2
20	7.5	35	56_{h7}	12	M4	76.8+0.3/–0.2	39.6+0.2/–0.1	3.6+0.3/–0.2
25	10	38	63_{h7}	16	M5	94+0.3/–0.2	44.7+0.2/–0.1	3.3+0.3/–0.2
32	12.5	55	81_{h7}	20	M6	114.8+0.3/–0.2	55.5+0.2/–0.1	5.5+0.3/–0.2
35	13.5	60	91_{h7}	22	M8	126.2+0.3/–0.2	67+0.2/–0.1	4+0.3/–0.2
40	13.5	60	91_{h7}	22	M8	131.2+0.3/–0.2	72+0.2/–0.1	4+0.3/–0.2

For size	H4	H5	T1	T2	N1[2]	Weight	Part no.	Type[1]
				+2	P9	[g]		
12	20.5	20±0.1	$16^{+0.2}$	11.6	2	38	**4835942**	**DARF-Q11-12**
16	23.5	23±0.1	$18.1^{+0.3}$	11.6	3	60	**4835943**	**DARF-Q11-16**
20	30.5	30±0.1	$25.1^{+0.3}$	13.5	4	79	**4835941**	**DARF-Q11-20**
25	40.5	40±0.2	$36.1^{+0.3}$	16.5	5	145	**4835938**	**DARF-Q11-25**
32	50.5	50±0.2	$45.1^{+0.3}$	21	6	287	**4835940**	**DARF-Q11-32**
35	50.5	50±0.2	$45.1^{+0.3}$	32	6	350	**4835939**	**DARF-Q11-35/40**
40	50.5	50±0.2	$45.1^{+0.3}$	32	6	350	**4835939**	**DARF-Q11-35/40**

1) Suitable for ATEX
2) Feather key to DIN 6885

Accessories

Clamping unit DADL-EL
For size 16 ... 63
(Order code: E1)
Products in stock

Material:
Housing: anodised aluminium
Bearing: plastic
RoHS-compliant

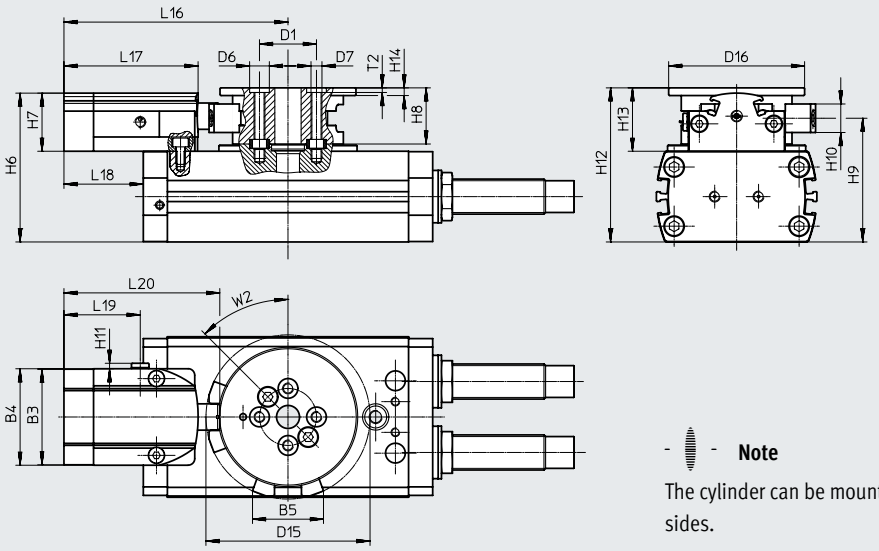

Note
The cylinder can be mounted on both sides.

Dimensions and ordering data

For size	B3 ±0.2	B4 ±0.2	B5	D1 Ø ±0.025	D6 Ø H7	D7	D15 Ø	D16 Ø	H6	H7 ±0.15	H8 ±0.1	H9
16	37.6	38	26.9	21	7	M4	61.9	49	51	18	17	43.1
20	43.6	44	32.4	24	7	M4	74.9	62	62.5	26.5	25.6	51.2
25	43.6	44	32.4	26	9	M5	74.9	62	67.9	26.5	25.6	56.5
32	43.6	44	39.4	40	9	M6	95.4	79	79	26.7	31.5	68.5
35	57.6	58	50.2	45	9	M6	110.9	89	98	35	34	83
40	57.6	58	50.2	45	9	M6	110.9	89	103	35	34	88
50	71.4	72	59.6	54	15	M8	124.3	110	123	45	42	101.5
63	71.4	72	65.8	63	15	M10	148.5	130	149	49	52	129.5

For size	H10	H11	H12	H13	H14	L16	L17	L18	L19	L20	T2 +0.1	W2
16	9	2.5	52.6	19.6	3.5	83	50	30.5	34	58.3	1.6	45°
20	13	2.5	65.2	29.2	3.5	102.2	61.2	48.2	34.8	71.1	1.6	45°
25	13	2.5	70.3	28.9	3.5	102.2	61.2	36.2	34.8	71.1	2.1	45°
32	17	2.5	87	37	4	112.2	61.2	30.7	34.8	71.1	2.1	45°
35	14.8	2.5	101	38	5	132.5	70.6	43.5	42.6	85.4	2.1	45°
40	14.8	2.5	106	38	5	132.5	70.6	18	42.6	85.4	2.1	45°
50	19	4.6	125	47	6	151	81	0	46	98	2.6	45°
63	22	4.6	159	59	6	163	81	–29.5	46	99.5	3.1	45°

For size	Pneumatic connection	Operating pressure [bar]	Position sensing	Adjustable swivel angle [°]	Weight [g]	Part no.	Type
16	M5	3 ... 8	Via proximity switch	60 ... 200	166	**1692770**	**DADL-EL-Q11-16**
20		5 ... 8			382	**1579786**	**DADL-EL-Q11-20**
25					370	**1568183**	**DADL-EL-Q11-25**
32				55 ... 200	600	**1631139**	**DADL-EL-Q11-32**
35		3 ... 8		57 ... 200	900	**1544900**	**DADL-EL-Q11-35/40**
40					900	**1544900**	**DADL-EL-Q11-35/40**
50	G1/8			62 ... 200	1610	**1796637**	**DADL-EL-Q11-50**
63				55 ... 200	2380	**1941568**	**DADL-EL-Q11-63**

Accessories

Sensing kit DASI-...-KT
For size 16 ... 63
(order code: R)
Products in stock

Material:
Anodised aluminium
RoHS-compliant

For sensing the piston position using
inductive proximity switches SIES
➔ page 61

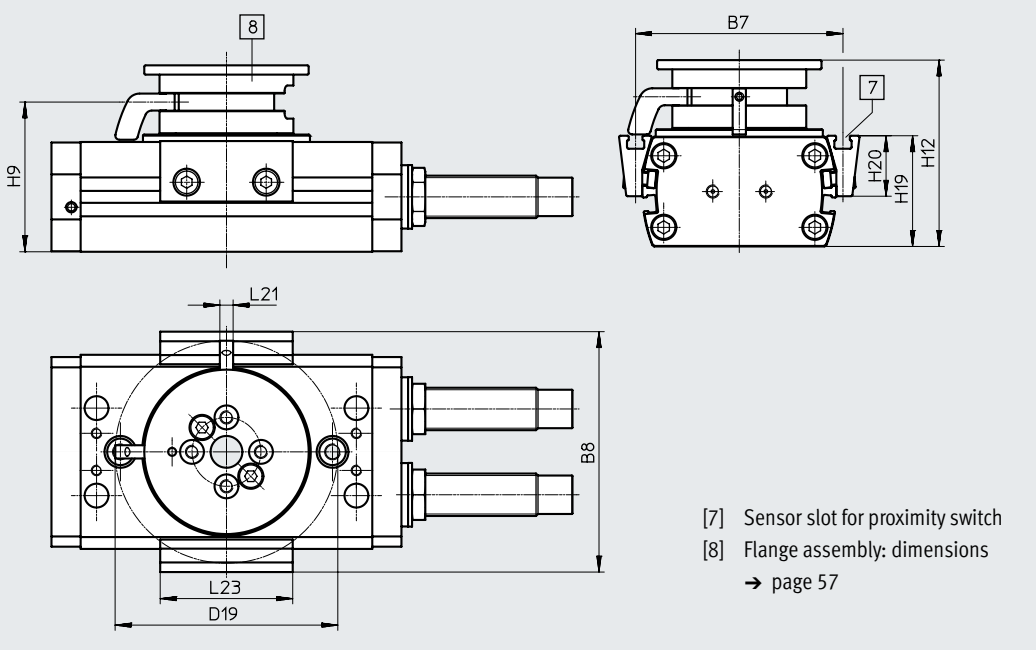

[7] Sensor slot for proximity switch
[8] Flange assembly: dimensions
➔ page 57

Dimensions and ordering data

For size	B7	B8	D19 ø	H9	H12	H19
16	64.4	76.1	70.9	43.1	52.6	33.5
20	74	85.7	84	51.2	65.2	36.4
25	78.2	90.7	84	56.5	70.3	41.8
32	100	113.5	107.5	68.5	87	50.5
35	116	132.9	125.2	83	101	63.5
40	118	135.8	125.2	88	106	68.5
50	136	155.3	146.6	101.5	125	79.1
63	163	185.3	173.9	129.5	159	101

For size	H20 ±0.1	L21	L23	Weight [g]	Part no.	Type[1)]
16	18.5	5	50	110	**1693008**	**DASI-Q11-16-A-KT**
20	20.2	5	50	192	**1580899**	**DASI-Q11-20-A-KT**
25	22.8	5	50	192	**1568461**	**DASI-Q11-25-A-KT**
32	26.5	7	50	366	**1632097**	**DASI-Q11-32-A-KT**
35	33.1	7	50	485	**1551144**	**DASI-Q11-35-A-KT**
40	35.5	7	50	485	**1550027**	**DASI-Q11-40-A-KT**
50	43	7	50	810	**1797135**	**DASI-Q11-50-A-KT**
63	55	7	50	1390	**1946877**	**DASI-Q11-63-A-KT**

1) Suitable for ATEX

Accessories

Ordering data[2]	For size	Description	Weight [g]	Part no.	Type	PE[1]
Clamping component DADL-EC						
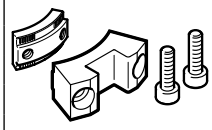	16	For securing an intermediate position in combination with the clamping unit DADL-EL	18	**1692496**	**DADL-EC-Q11-16**	1
	20, 25		36	**1435411**	**DADL-EC-Q11-20/25**	
	32		67	**1631170**	**DADL-EC-Q11-32**	
	35, 40		98	**1535091**	**DADL-EC-Q11-35/40**	
	50		140	**1796626**	**DADL-EC-Q11-50**	
	63		220	**1941355**	**DADL-EC-Q11-63**	
Sensor bracket DASI-...-SR[3]						
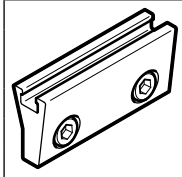	16	Additional sensing option in combination with the sensing kit DASI-...-KT	28	**1692983**	**DASI-Q11-16-A-SR**	2
	20		32	**1581420**	**DASI-Q11-20-A-SR**	
	25		32	**1568451**	**DASI-Q11-25-A-SR**	
	32		42	**1631997**	**DASI-Q11-32-A-SR**	
	35		62	**1550870**	**DASI-Q11-35-A-SR**	
	40		62	**1548054**	**DASI-Q11-40-A-SR**	
	50		75	**1797071**	**DASI-Q11-50-A-SR**	
	63		110	**1971563**	**DASI-Q11-63-A-SR**	
Switch lug DASI-...-SL[3]						
	16	Additional sensing option in combination with the sensing kit DASI-...-KT	2.5	**1692969**	**DASI-Q11-16-A-SL**	1
	20, 25		4	**1568436**	**DASI-Q11-20/25-A-SL**	
	32		6	**1631824**	**DASI-Q11-32-A-SL**	
	35, 40		8	**1548155**	**DASI-Q11-35/40-A-SL**	
	50		10	**1797021**	**DASI-Q11-50-A-SL**	
	63		15	**1971550**	**DASI-Q11-63-A-SL**	

1) Packaging unit
2) Products in stock
3) Suitable for ATEX

Accessories

Ordering data[2]	For size	Description	Weight [g]	Part no.	Type	PE[1]
Shock absorber DYSC[3]						
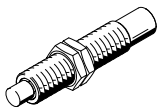	12	• Self-adjusting shock absorbers for use as external cushioning (Y12) • Included in the scope of delivery for semi-rotary drive DRRD-...-Y12	9	**548011**	**DYSC-5-5-Y1F**	1
	16		17	**548012**	**DYSC-7-5-Y1F**	
	20		36	**548013**	**DYSC-8-8-Y1F**	
	25		81	**548014**	**DYSC-12-12-Y1F**	
	32, 35, 40		210	**553593**	**DYSC-16-18-Y1F**	
	50		370	**2479149**	**DYSC-20-18-Y1F**	
	63		575	**2480234**	**DYSC-25-25-Y1F**	
Shock absorber DYSD[3]						
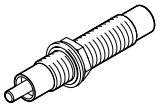	12	• Self-adjusting shock absorbers (Y9) • Included in the scope of delivery for semi-rotary drive DRRD-...-Y9 • Specially for pressure chamber	10	**8161520**	**DYSD-Q11-5-5-Y1F-L-Y9**	1
	16		20	**8161521**	**DYSD-Q11-7-5-Y1F-L-Y9**	
	20		40	**8161523**	**DYSD-Q11-8-8-Y1F-L-Y9**	
	25		95	**8161525**	**DYSD-Q11-12-12-Y1F-Y9**	
	32		220	**8161528**	**DYSD-Q11-16-15-Y1F-Y9**	
	35, 40		385	**8161530**	**DYSD-Q11-20-16-Y1F-Y9**	
	50		635	**8161533**	**DYSD-Q11-25-24-Y1F-Y9**	
	63		1050	**8161535**	**DYSD-Q11-32-25-Y1F-S-Y9**	
	25	• Self-adjusting shock absorbers, hard (Y10) • Included in the scope of delivery for semi-rotary drive DRRD-...-Y10 • Specially for pressure chamber	95	**8161526**	**DYSD-Q11-12-12-Y1F-L-Y10**	
	35, 40		385	**8161531**	**DYSD-Q11-20-16-Y1F-L-Y10**	
	50		635	**8161534**	**DYSD-Q11-25-24-Y1F-L-Y10**	
	63		1050	**8161536**	**DYSD-Q11-32-25-Y1F-L-Y10**	
	16	• Self-adjusting shock absorbers, soft (Y14) • Included in the scope of delivery for semi-rotary drive DRRD-...-Y14 • Specially for pressure chamber	20	**8161522**	**DYSD-Q11-7-5-Y1F-Y14**	
	20		40	**8161524**	**DYSD-Q11-8-8-Y1F-S-Y14**	
	25		95	**8161527**	**DYSD-Q11-12-12-Y1F-S-Y14**	
	32		220	**8161529**	**DYSD-Q11-16-15-Y1F-S-Y14**	
	35, 40		385	**8161532**	**DYSD-Q11-20-16-Y1F-S-Y14**	
Centring sleeve ZBH[3]						
	8, 10	• For centring the semi-rotary drive • 2 included in the scope of delivery for the semi-rotary drive	1	**8146544**	**ZBH-7-B**	10
	12, 16, 20		1	**8137184**	**ZBH-9-B**	
	25		1	**8137185**	**ZBH-12-B**	
	32 ... 50		3	**191409**	**ZBH-15**	
	63		5	**8023856**	**ZBH-25**	
	8, 10, 12	• For centring attachments on the flange shaft • Centring sleeves are included in the scope of delivery of the attachments	1	**8146543**	**ZBH-5-B**	
	16, 20		1	**8146544**	**ZBH-7-B**	
	25 ... 40		1	**8137184**	**ZBH-9-B**	
	50		1	**8137185**	**ZBH-12-B**	
	63		3	**191409**	**ZBH-15**	

1) Packaging unit
2) Products in stock
3) Suitable for ATEX

Accessories

Proximity switch for size 8 ... 12

Ordering data – Proximity switch for C-slot, magneto-resistive

Data sheets ➔ Internet: smt

	Type of mounting	Switching output	Electrical connection, outlet direction of connection	Cable length [m]	Part no.	Type
N/O contact						
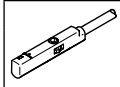	Inserted in the slot from above	PNP	Cable, 3-wire, in-line	2.5	★ 551373	SMT-10M-PS-24V-E-2,5-L-OE
			Plug M8x1, 3-pin, in-line	0.3	★ 551375	SMT-10M-PS-24V-E-0,3-L-M8D
			Plug M8x1, 3-pin, crosswise	0.3	551376	SMT-10M-PS-24V-E-0,3-Q-M8D
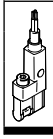	Inserted in the slot lengthwise	PNP	Cable, 3-wire, crosswise	2.5	547862	SMT-10G-PS-24V-E-2,5Q-OE
			Plug M8x1, 3-pin, crosswise	0.3	547863	SMT-10G-PS-24V-E-0,3Q-M8D

Ordering data – Proximity switches for C-slot, magnetic reed

Data sheets ➔ Internet: sme

	Type of mounting	Switching output	Electrical connection, outlet direction of connection	Cable length [m]	Part no.	Type
N/O contact						
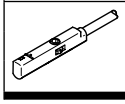	Inserted in the slot from above	Contacting	Plug M8x1, 3-pin, in-line	0.3	★ 551367	SME-10M-DS-24V-E-0,3-L-M8D
			Cable, 3-wire, in-line	2.5	★ 551365	SME-10M-DS-24V-E-2,5-L-OE
			Cable, 2-wire, in-line	2.5	★ 551369	SME-10M-ZS-24V-E-2,5-L-OE

Proximity switch for size 16 ... 63

Ordering data – Proximity switches for T-slot, magneto-resistive

Data sheets ➔ Internet: smt

	Type of mounting	Switching output	Electrical connection	Cable length [m]	Part no.	Type
N/O contact						
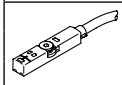	Inserted in the slot from above, flush with the cylinder profile, short design	PNP	Cable, 3-wire	2.5	★ 574335	SMT-8M-A-PS-24V-E-2,5-OE
			Plug M8x1, 3-pin	0.3	★ 574334	SMT-8M-A-PS-24V-E-0,3-M8D
			Plug M12x1, 3-pin	0.3	★ 574337	SMT-8M-A-PS-24V-E-0,3-M12
		NPN	Cable, 3-wire	2.5	★ 574338	SMT-8M-A-NS-24V-E-2,5-OE
			Plug M8x1, 3-pin	0.3	★ 574339	SMT-8M-A-NS-24V-E-0,3-M8D
N/C contact						
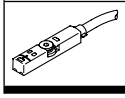	Inserted in the slot from above, flush with the cylinder profile, short design	PNP	Cable, 3-wire	7.5	★ 574340	SMT-8M-A-PO-24V-E-7,5-OE

Ordering data – Proximity switches for T-slot, magnetic reed

Data sheets ➔ Internet: sme

	Type of mounting	Switching output	Electrical connection	Cable length [m]	Part no.	Type
N/O contact						
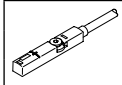	Inserted in the slot from above, flush with the cylinder profile	Contacting	Cable, 3-wire	2.5	★ 543862	SME-8M-DS-24V-K-2,5-OE
				5.0	★ 543863	SME-8M-DS-24V-K-5,0-OE
			Cable, 2-wire	2.5	★ 543872	SME-8M-ZS-24V-K-2,5-OE
			Plug M8x1, 3-pin	0.3	★ 543861	SME-8M-DS-24V-K-0,3-M8D
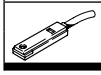	Inserted in the slot lengthwise, flush with the cylinder profile	Contacting	Cable, 3-wire	2.5	150855	SME-8-K-LED-24
			Plug M8x1, 3-pin	0.3	150857	SME-8-S-LED-24

Accessories

Proximity switch for size 16 ... 63

Ordering data – Proximity switches for T-slot, inductive

Data sheets → Internet: sies

	Type of mounting	Switching output	Electrical connection	Cable length [m]	Part no.	Type
N/O contact						
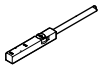	Inserted in the slot from above, flush with the cylinder profile	PNP	Cable, 3-wire	7.5	**551386**	**SIES-8M-PS-24V-K-7,5-OE**
			Plug M8x1, 3-pin	0.3	**551387**	**SIES-8M-PS-24V-K-0,3-M8D**
		NPN	Cable, 3-wire	7.5	**551396**	**SIES-8M-NS-24V-K-7,5-OE**
			Plug M8x1, 3-pin	0.3	**551397**	**SIES-8M-NS-24V-K-0,3-M8D**
N/C contact						
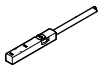	Inserted in the slot from above, flush with the cylinder profile	PNP	Cable, 3-wire	7.5	**551391**	**SIES-8M-PO-24V-K-7,5-OE**
			Plug M8x1, 3-pin	0.3	**551392**	**SIES-8M-PO-24V-K-0,3-M8D**
		NPN	Cable, 3-wire	7.5	**551401**	**SIES-8M-NO-24V-K-7,5-OE**
			Plug M8x1, 3-pin	0.3	**551402**	**SIES-8M-NO-24V-K-0,3-M8D**

Note

The inductive proximity switches SIES can only be used in combination with the sensing kit DASI-...-KT.

Ordering data – Connecting cables

Data sheets → Internet: nebu

	Electrical connection, left	Electrical connection, right	Cable length [m]	Part no.	Type
	Straight socket, M8x1, 3-pin	Cable, open end, 3-wire	2.5	★ **541333**	**NEBU-M8G3-K-2.5-LE3**
			5	★ **541334**	**NEBU-M8G3-K-5-LE3**
	Angled socket, M8x1, 3-pin	Cable, open end, 3-wire	2.5	★ **541338**	**NEBU-M8W3-K-2.5-LE3**
			5	★ **541341**	**NEBU-M8W3-K-5-LE3**

Accessories

Position transmitter for size 16 ... 63

The position transmitter continuously senses the position of the piston.
It has an analogue output with an output signal in proportion to the piston position.

Ordering data – Position transmitter for T-slot

Data sheets ➔ Internet: position transmitter

	Type of mounting	Electrical connection	Analogue output [V]	Cable length [m]	Part no.	Type
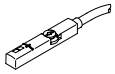	Inserted in the slot from above	Plug M8x1, 4-pin, in-line	0 ... 10	0.3	**553744**	**SMAT-8M-U-E-0,3-M8D**

Size	16	20	25	32	35	40	50	63
Position measuring range for SMAT-8M [°]	151	120	183	159	185	132	82	64

	Position measuring range	Type of mounting	Electrical connection	Analogue output [mA]	Cable length [m]	Part no.	Type
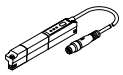	0 ... 50	Inserted in the slot from above	Plug M8x1, 4-pin, in-line	4 ... 20	0.3	**1531265**	**SDAT-MHS-M50-1L-SA-E-0.3-M8**
	0 ... 80					**1531266**	**SDAT-MHS-M80-1L-SA-E-0.3-M8**
	0 ... 100					**1531267**	**SDAT-MHS-M100-1L-SA-E-0.3-M8**
	0 ... 125					**1531268**	**SDAT-MHS-M125-1L-SA-E-0.3-M8**
	0 ... 160					**1531269**	**SDAT-MHS-M160-1L-SA-E-0.3-M8**

Ordering data – Connecting cables

Data sheets ➔ Internet: nebu

	Electrical connection, left	Electrical connection, right	Cable length [m]	Part no.	Type
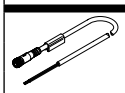	Straight socket, M8x1, 4-pin	Cable, open end, 4-wire	2.5	**541342**	**NEBU-M8G4-K-2.5-LE4**
			5	**541343**	**NEBU-M8G4-K-5-LE4**
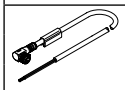	Angled socket, M8x1, 4-pin	Cable, open end, 4-wire	2.5	**541344**	**NEBU-M8W4-K-2.5-LE4**
			5	**541345**	**NEBU-M8W4-K-5-LE4**

Accessories

Wiring of the proximity switches in combination with the energy through-feed

Size 16/20

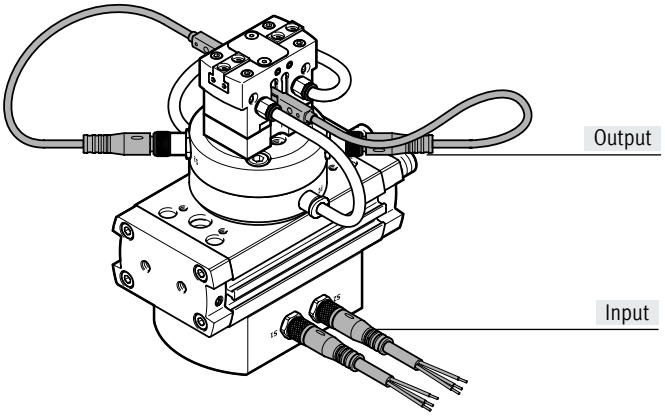

Size 25/32/35

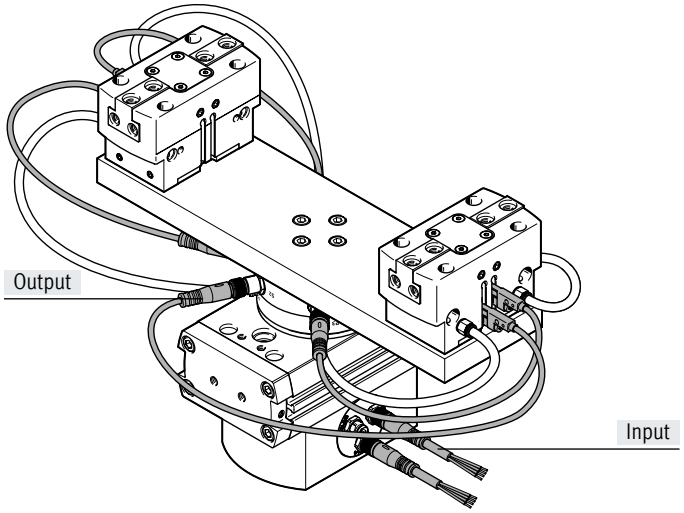

Size 40/50/63

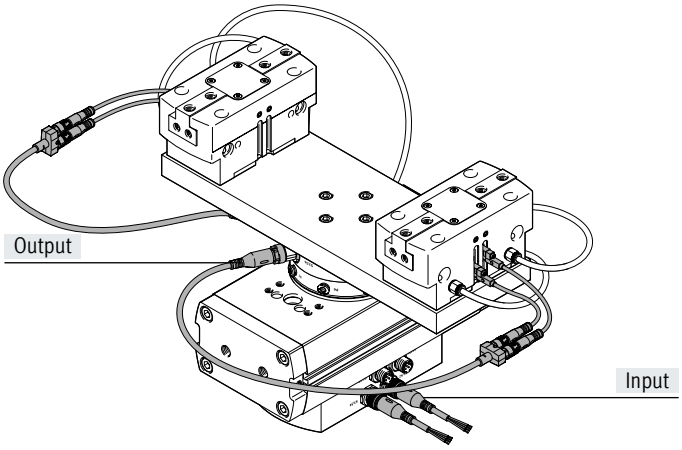

Note

Proximity switches with plugs must be used for attachments (e.g. grippers) at the output. For sizes 16 ... 35 these can be connected directly to the energy through-feed module.
For sizes 40 ... 63, the proximity switch must be connected to the energy through-feed module through a Y-distributor.

Ordering data

Data sheets → Internet: nebu

	Electrical connection left	Electrical connection right	Cable length [m]	Part no.	Type
Input – Connecting cable					
Size 16/20					
	Straight socket, M8x1, 3-pin	Cable, open end, 3-wire	2.5	★ **541333**	**NEBU-M8G3-K-2.5-LE3**
	Straight socket, M8x1, 3-pin	Cable, open end, 3-wire	5	★ **541334**	**NEBU-M8G3-K-5-LE3**
Size 25/32/35					
	Straight socket, M8x1, 4-pin	Cable, open end, 4-wire	2.5	**541342**	**NEBU-M8G4-K-2.5-LE4**
	Straight socket, M8x1, 4-pin	Cable, open end, 4-wire	5	**541343**	**NEBU-M8G4-K-5-LE4**
Size 40/50/63					
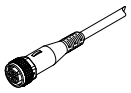	Straight socket, M12x1, 5-pin	Cable, open end, 4-wire	2.5	★ **550326**	**NEBU-M12G5-K-2.5-LE4**
	Straight socket, M12x1, 5-pin	Cable, open end, 4-wire	5	★ **541328**	**NEBU-M12G5-K-5-LE4**
Output – Y-distributor					
Size 40/50/63					
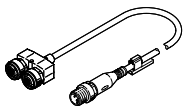	Straight plug, M12x1, 4-pin	2x straight sockets, M8x1, 3-pin	0.5[1]	**8032867**	**NEDY-L2R1-V1-M8G3-U-M12G4-0.5R**

1) Cable lengths can be selected between 0.3 m and 30 m → Internet: nedy

Accessories

Setting the swivel speed

Basic drive and intermediate position module must only be operated with controlled air flow. The flow control should be connected as close as possible to the semi-rotary drive (e.g. one-way flow control valve GRLA-...) ➔ table below

In the event of pressure failure, the payload may hit an end position in an uncontrolled manner. In order to prevent this, piloted check valves HGL or an air reservoir VZS are recommended.

Ordering data – Accessories for basic drive

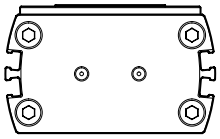

	For size	Description	Weight [g]	Part no.	Type	PE[1]
One-way flow control valve GRLA						
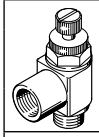	16[2], 20, 25	• To set the swivel speed	14	★ **197576**	**GRLA-M5-QS-3-RS-D**	1
			14	★ **197577**	**GRLA-M5-QS-4-RS-D**	
	32, 35, 40		30	**151169**	**GRLA-1/8-RS-B**	
	50		59	**151175**	**GRLA-1/4-RS-B**	
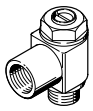	63		97	**151178**	**GRLA-3/8-B**	

1) Packaging unit

Ordering data – Accessories for intermediate position (PS1)

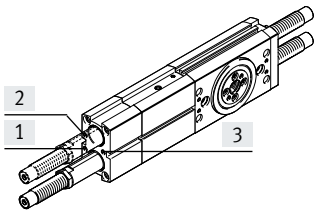

The following movements are adjusted using the supply ports [1] and [2]: end position ➔ intermediate position
Both directions can be adjusted separately from each other.
The following movement is adjusted via supply port [3]:
Intermediate position ➔ end position
Both directions are set simultaneously.

	For size	Description	Weight [g]	Part no.	Type	PE[1]
One-way flow control valve GRLA						
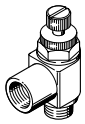	16[2], 20, 25, 32, 35, 40	• To set the swivel speed from the intermediate position	14	★ **197576**	**GRLA-M5-QS-3-RS-D**	1
			14	★ **197577**	**GRLA-M5-QS-4-RS-D**	
	50		30	**151169**	**GRLA-1/8-RS-B**	
Check valve HGL						
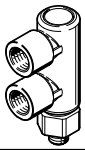	20, 25, 32, 35, 40	• For cushioning the payload in the event of a loss of compressed air	21	★ **530029**	**HGL-M5-B**	1
			21	★ **530038**	**HGL-M5-QS-4**	
	50		26	**543253**	**HGL-1/8-1/8-B**	
			21	★ **530030**	**HGL-1/8-B**	
Air reservoir VZS						
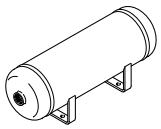	16, 20, 25, 32, 35, 40, 50	• For cushioning the payload in the event of a loss of compressed air	8600	**192161**	**VZS-20-B**	1

1) Packaging unit
2) Strongly recommended for this size

Accessories

Adapter kit
DHAA

Material:
Wrought aluminium alloy
RoHS-compliant

Note
The kit includes the individual mounting interface as well as the necessary mounting material.

Permissible drive/drive combinations with adapter kit

Download CAD data ➔ www.festo.com

Combination	[1] Drive Size	[2] Drive Size	Adapter kit CRC[1]	Part no.	Type	Quantity required
DGSL/DRRD	**DGSL**	**DRRD**	**DHAA**			
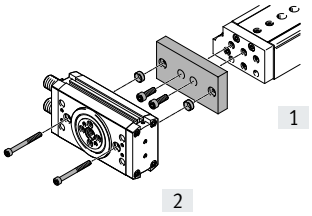	4	8	2	**2767489**	**DHAA-D-G6-4-Q11-8**	1
	6	8		**2762930**	**DHAA-D-G6-6-Q11-8**	
	8, 10	10		**2737394**	**DHAA-D-G6-8/10-Q11-10**	
	12, 16	10		**2737247**	**DHAA-D-G6-12/16-Q11-10**	
	8, 10	12		**2736429**	**DHAA-D-G6-8/10-Q11-12**	
	12	12		**2782718**	**DHAA-D-G6-12-Q11-12**	
	16	12		**2734418**	**DHAA-D-G6-16-Q11-12**	
	20	16		**1917841**	**DHAA-D-G6-20-Q11-16**	
	20, 25	20		**1916912**	**DHAA-D-G6-20/25-Q11-20**	
	25	25		**1707360**	**DHAA-D-G6-25-Q11-25**	
	DGSL	**DRRD-...-P...E...[2]**	**DHAA**			
	20	16	2	**2332271**	**DHAA-D-G6-20-Q11-16-E**	1
	20, 25	20		**2332452**	**DHAA-D-G6-20/25-Q11-20-E**	
	25	25		**2332584**	**DHAA-D-G6-25-Q11-25-E**	
EGSL/DRRD	**EGSL**	**DRRD**	**DHAA**			
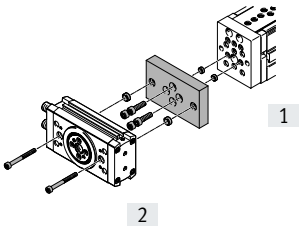	35	8	2	**2730033**	**DHAA-D-E8-35-Q11-8**	1
	35	10		**2729506**	**DHAA-D-E8-35-Q11-10**	
	45	10		**2728486**	**DHAA-D-E8-45-Q11-10**	
	35	12		**2719384**	**DHAA-D-E8-35-Q11-12**	
	45, 55	12		**2715152**	**DHAA-D-E8-45/55-Q11-12**	
	55	16		**1926914**	**DHAA-D-E8-55-Q11-16**	
	75	16		**1928306**	**DHAA-D-E8-75-Q11-16**	
	75	20		**1930038**	**DHAA-D-E8-75-Q11-20**	
	EGSL	**DRRD-...-P...E...[2]**	**DHAA**			
	55	16	2	**2279410**	**DHAA-D-E8-55-Q11-16-E**	1
	75	16		**2279453**	**DHAA-D-E8-75-Q11-16-E**	
	75	20		**2279473**	**DHAA-D-E8-75-Q11-20-E**	

1) Corrosion resistance class CRC 2 to Festo standard FN 940070
Moderate corrosion stress. Indoor applications in which condensation can occur. External visible parts with primarily decorative surface requirements which are in direct contact with a normal industrial environment.
2) With energy through-feed

Accessories

Adapter kit
DHAA

Material:
Wrought aluminium alloy
RoHS-compliant

Note
The kit includes the individual mounting interface as well as the necessary mounting material.

Permissible drive/drive combinations with adapter kit

Download CAD data ➔ www.festo.com

Combination	[1] Drive Size	[2] Drive Size	Adapter kit CRC[1]	Part no.	Type	Quantity required
ELCC/DRRD	**ELCC**	**DRRD**	**DHAA**			
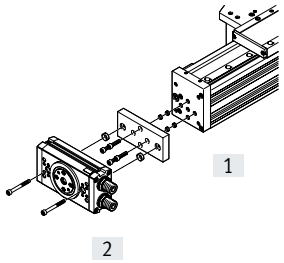	60	10	2	**2737394**	**DHAA-D-G6-8/10-Q11-10**	1
	60	12		**2736429**	**DHAA-D-G6-8/10-Q11-12**	
	60	16		**1675259**	**DHAA-D-E2-18-Q11-16**	
	60, 70	20		**1679833**	**DHAA-D-E2-18/25-Q11-20**	
	60, 70	25		**1696421**	**DHAA-D-E2-25-Q11-25**	
	70	32		**1702297**	**DHAA-D-E2-25-Q11-32**	
	70, 90	32		**5154625**	**DHAA-D-E21-70...110-Q11-32**	
	70, 90	35		**5154627**	**DHAA-D-E21-70...110-Q11-35**	
	90, 110	40		**5154629**	**DHAA-D-E21-70...110-Q11-40**	
	90, 110	50		**5154639**	**DHAA-D-E21-70...110-Q11-50**	
	110	63		**5154642**	**DHAA-D-E21-70...110-Q11-63**	
	ELCC	**DRRD-...-P...E...[2]**	**DHAA**			
	60	16	2	**2328624**	**DHAA-D-E2-18-Q11-16-E**	1
	60, 70	20		**2328779**	**DHAA-D-E2-18/25-Q11-20-E**	
	60, 70	25		**2328793**	**DHAA-D-E2-25-Q11-25-E**	
	70	32		**2328805**	**DHAA-D-E2-25-Q11-32-E**	
	70, 90	32		**5154626**	**DHAA-D-E21-70...110-Q11-32-E**	
	70, 90	35		**5154628**	**DHAA-D-E21-70...110-Q11-35-E**	
	90, 110	40		**5154630**	**DHAA-D-E21-70...110-Q11-40-E**	
	90, 110	50		**5154640**	**DHAA-D-E21-70...110-Q11-50-E**	
	110	63		**5154643**	**DHAA-D-E21-70...110-Q11-63-E**	

1) Corrosion resistance class CRC 2 to Festo standard FN 940070
Moderate corrosion stress. Indoor applications in which condensation can occur. External visible parts with primarily decorative surface requirements which are in direct contact with a normal industrial environment.
2) With energy through-feed

Accessories

Adapter kit
DHAA, HAPG

Material:
Wrought aluminium alloy
RoHS-compliant

Note
The kit includes the individual mounting interface as well as the necessary mounting material.

Permissible drive/drive combinations with adapter kit

Download CAD data → www.festo.com

Combination	[1] Drive Size	[2] Drive Size	Adapter kit CRC[1]	Part no.	Type	Quantity required
HSP/DRRD	**HSP**	**DRRD**	**DHAA**			
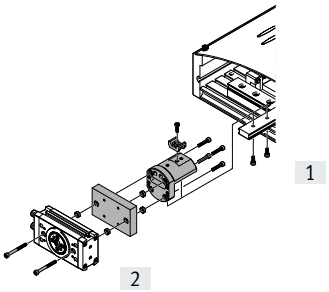	12	8	2	**2786084**	**DHAA-D-H4-12-Q11-8**	1
			–	**540881**	**HAPG-70-B**	
	16	10	2	**2785801**	**DHAA-D-H4/H5-12/16-Q11-10**	
			–	**540882**	**HAPG-71-B**	
	16	12	2	**2784113**	**DHAA-D-H4/H5-16/25-Q11-12**	
			–	**540882**	**HAPG-71-B**	
	25	12	2	**2784113**	**DHAA-D-H4/H5-16/25-Q11-12**	
			–	**540883**	**HAPG-72-B[3]**	
	25	16	2	**1919910**	**DHAA-D-H4-25-Q11-16**	
			–	**540883**	**HAPG-72-B[3]**	
	HSP	**DRRD-...-P...E...[2]**	**DHAA**			
	25	16	2	**2284940**	**DHAA-D-H4-25-Q11-16-E**	1
			–	**540883**	**HAPG-72-B[3]**	
HSW/DRRD	**HSW**	**DRRD**	**DHAA**			
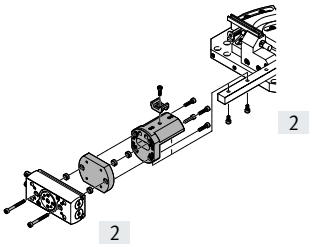	10	8	2	**2789655**	**DHAA-D-H5-10-Q11-8**	1
			–	**540249**	**HAPG-69**	
	12	8	2	**2788114**	**DHAA-D-H5-12-Q11-8**	
			–	**540882**	**HAPG-71-B**	
	12	10	2	**2785801**	**DHAA-D-H4/H5-12/16-Q11-10**	
			–	**540882**	**HAPG-71-B**	
	16	10	2	**2785801**	**DHAA-D-H4/H5-12/16-Q11-10**	
			–	**540882**	**HAPG-71-B**	
	16	12	2	**2784113**	**DHAA-D-H4/H5-16/25-Q11-12**	
			–	**540882**	**HAPG-71-B**	

1) Corrosion resistance class CRC 2 to Festo standard FN 940070
Moderate corrosion stress. Indoor applications in which condensation can occur. External visible parts with primarily decorative surface requirements which are in direct contact with a normal industrial environment.
2) With energy through-feed
3) The centring sleeves for attaching to the adapter kit HAPG-72-B are not required