REVISIONS					
REV.	ECN NO.	LOCATION	DESCRIPTION	DATE	DESIGN
A0	N/A		INITIAL RELEASE	/	/
A1	N/A	A1 X2	产品尺寸变更，图面升级整理图面	2025.05.24	阿树

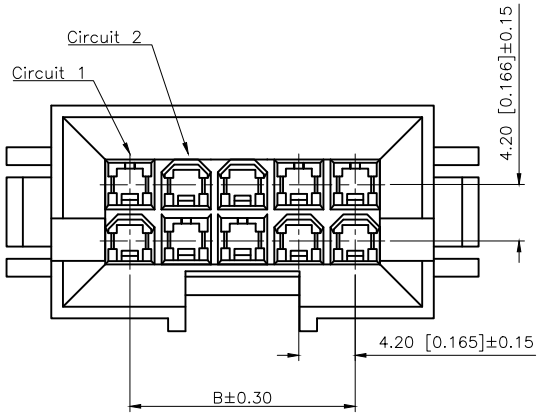

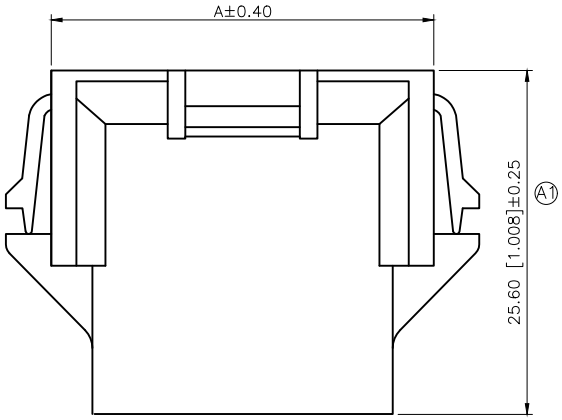

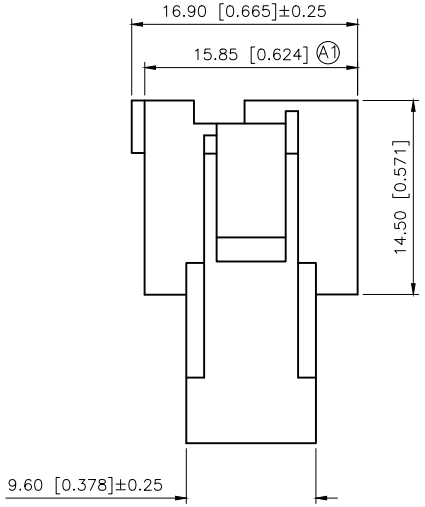

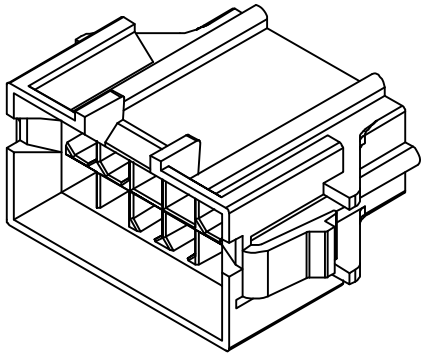

Specifications:
规格：
Voltage rating:600V AC/DC
额定电压：600V AC/DC
Current rating:7A AC/DC
额定电流：7A AC/DC
Withstanding voltage:1500V AC/minute
耐受电压：1500V AC/分钟
Temperature range:−25℃−+85℃
温度范围：−25℃−+85℃
Insulation resistance:1000MΩ min
绝缘电阻：1000MΩ Min
Contact resistance:20mΩ Max
接触电阻：20mΩ Max

PART NO.:

X9357 H F−2xXX B−N0 XX
① ② ③ ④ ⑤ ⑥ ⑦

①Series No
②Category:H−HSG
③Welding Board Angle:F−Fmale HGS
④Row No.−Pin No.:2xXX−2x04P~2x22P
⑤Plug the Pin & special No.: B−With a trough
⑥Material:N0−PA66 94V−0
⑦Color:Blank−natural color

Poles	Dimensions(mm)			
	A	B	C	D
2x02	15.80	4.20	19.80	16.30
2x03	20.00	8.40	24.00	20.50
2x04	24.20	12.60	28.20	24.70
2x05	28.40	16.80	32.40	28.90
2x06	32.60	21.00	36.60	33.10
2x07	36.80	25.20	40.80	37.30
2x08	41.00	29.40	45.00	41.50
2x09	45.20	33.60	49.20	45.70
2x10	49.40	37.80	53.40	49.90
2x11	53.60	42.00	57.60	54.10
2x12	57.80	46.20	61.80	58.30

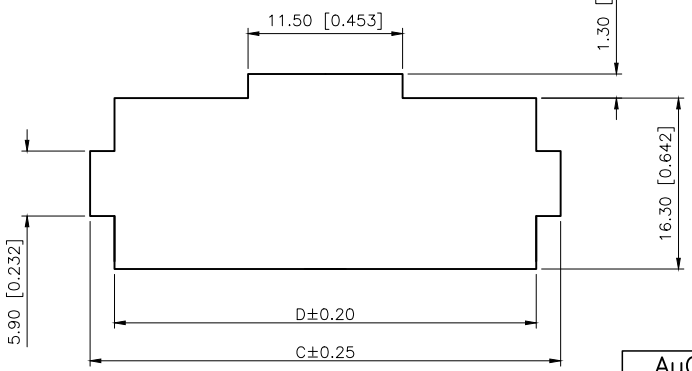

RECOMMENDED PCB CUTOUT

X9357HF−2xXXB−N0	Nylon 66 UL 94V−0	9357TM	X9357HM−B 9357WR−B
PART NO	Material	Suitable XKB Terminal	Suitable XKB Terminal

AuGLAR	±5°
X.	±0.40
X.x	±0.30
X.xx	±0.20
X.xxx	±0.15
UNSPECIFIED TOLERAuCES	

XKB Connection

DESIGN	阿树	VIEW:	MODEL TYPE: 4.20mm Crimp Style Connectors
CHECKED		UNIT: mm/in	PART NO.: X9357HF−2xXXB−N0
APPROVED		SIZE: A4	DWG NO.:

XKB INDUSTRIAL PRECISION CO.,LIMITED

SCALE	PAGE	REVISION
N/A	1/1	A1