M12 4 POLE AC MALE

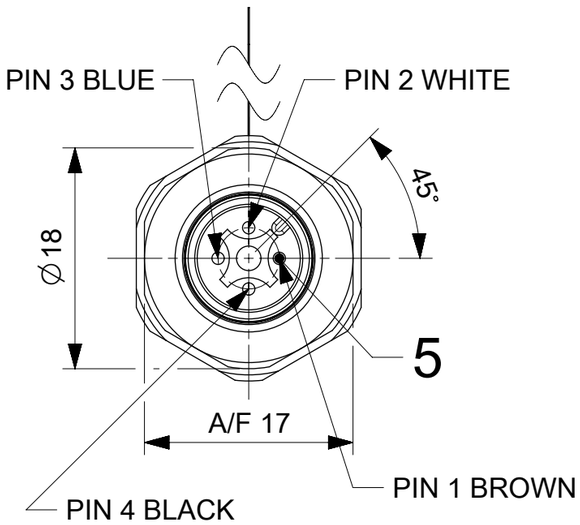

4POLE SHOWN

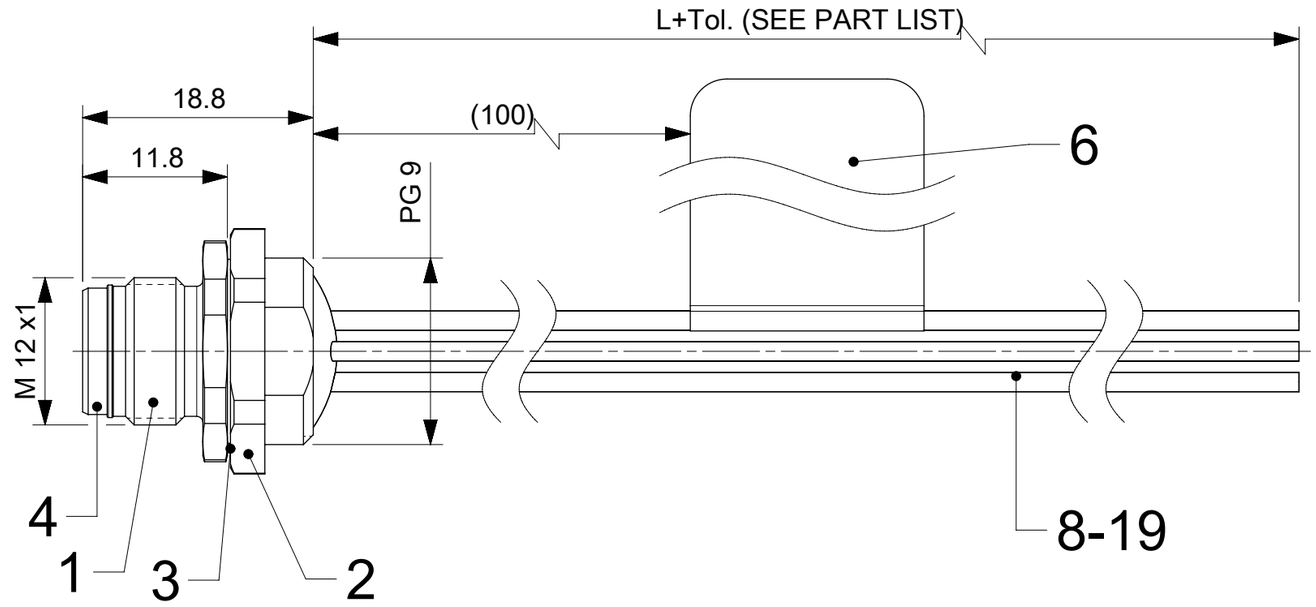

4POLE SHOWN

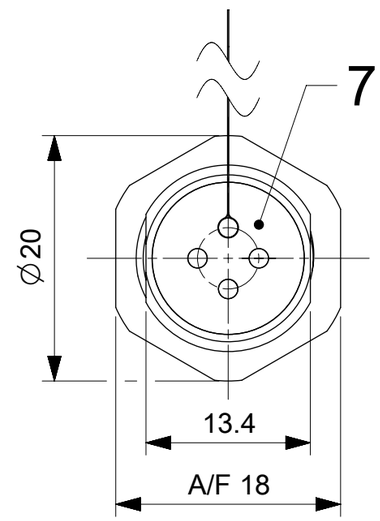

M12 5 POLE AC MALE

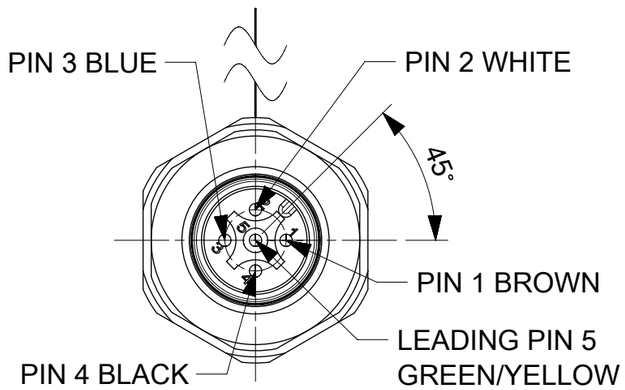

M12 8 POLE AC MALE

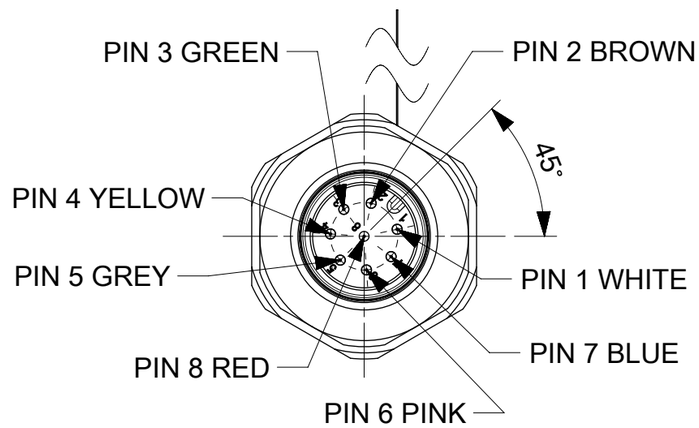

M12 12 POLE AC MALE

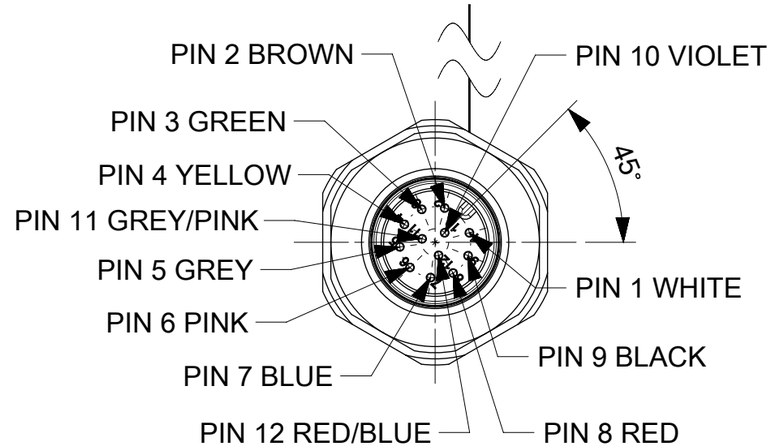

M12 4 POLE DC MALE

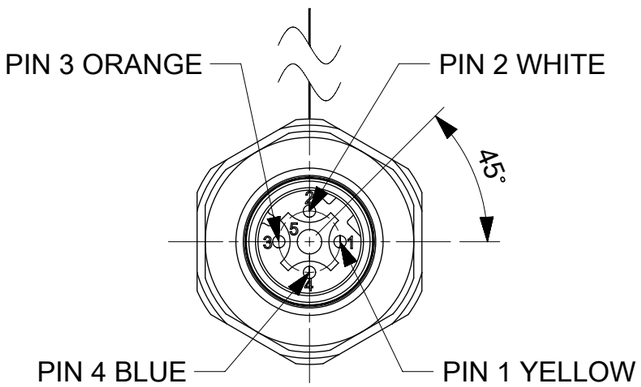

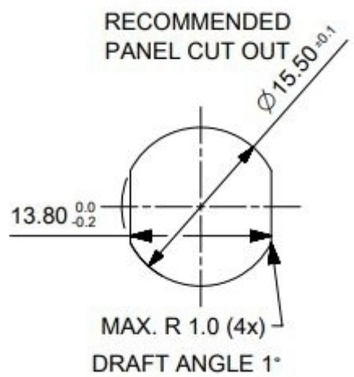

FUNCTIONAL SYMBOLS	THIS DRAWING CONTAINS INFORMATION THAT IS PROPRIETARY TO MOLEX ELECTRONIC TECHNOLOGIES, LLC AND SHOULD NOT BE USED WITHOUT WRITTEN PERMISSION				
FA = 0	DIMENSION UNITS: mm	SCALE: 2:1	CURRENT REV DESC: CHANGED MIN. TEMP. IN TABLE		molex
FC = 0	GENERAL TOLERANCES (UNLESS SPECIFIED)				REC U12 XP XC MA PVC XM PG9 FM WIR SE BRA AU
FP = 0	ANGULAR TOL ± 1.0 °		EC NO: 736602		
	4 PLACES ± 0.0		DRWN: RSCHIEBER	2023/01/30	
DIVISIONAL SYMBOLS	3 PLACES ± 0.0		CHK'D: RSILLER	2023/01/31	PRODUCT CUSTOMER DRAWING
	2 PLACES ± 0.05		APPR: RSILLER	2023/01/31	
	1 PLACE ± 0.3		INITIAL REVISION:		DOCUMENT NUMBER: 1204040058 / DOC TYPE: PSD / DOC PART: 000 / REVISION: A2
	0 PLACES ± 0.5		DRWN: JELIZAINCIN	2021/11/29	
			APPR: RSILLER	2022/07/14	
	DRAFT WHERE APPLICABLE MUST REMAIN WITHIN DIMENSIONS	THIRD ANGLE PROJECTION	DRAWING: A3-SIZE	SERIES: 120404	MATERIAL NUMBER: SEE PART LIST / CUSTOMER: GENERAL MARKET / SHEET NUMBER: 1 OF 3

DOCUMENT STATUS	P1	RELEASE DATE	2023/01/31 08:21:42

FORMAT: tb-prod-A3
REVISION: J
DATE: 2020/01/14

POLES	4 POLE	5 POLE	8 POLE	12 POLE	4 POLE
VOLTAGE RATING	250V	60V	30V	30V	250V
CODING	A - Code	A - Code	A - Code	A - Code	D - Code
AMPERE RATING	4A	4A	2A	1.5A	4A
PROTECTION CLASS CONNECTOR INTERFACE AND SHELL TO ENCLOSURE	IP 67/69K (in mated condition / when properly installed)				
OPERATING TEMP.	-40°C / +90°C				
UL/CSA CERTIFICATION	CSA FILE NO. LR6837, C´CSA´US MARK				Pending
WIRE LEAD	0.34 mm² PVC	0.34/0.5 mm² PVC	0.25 mm² PVC	0.14 mm² PVC	0.34 mm² PVC
PIN DIAMETER	1.0 mm	1.0 mm	0.8 mm	0.6 mm	1.0 mm

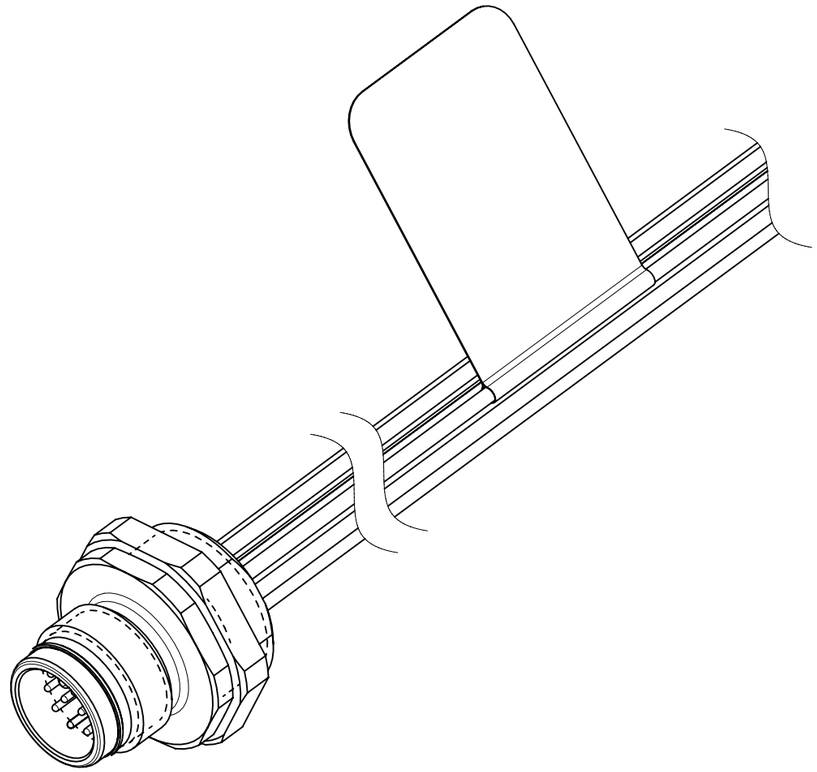

PART LIST 4P AC

MOLEX P/N	ENGINEERING NUMBER	DESCRIPTION	L [mm]	TOL. [mm]
1204040058	YR4J26E03C300	REC U12 4P AC MA PVC 0.3M PG9 FM WIR BRA	300	+40
1204040062	YR4J26E03C500	REC U12 4P AC MA PVC 0.5M PG9 FM WIR BRA	500	+40

PART LIST 5P AC

MOLEX P/N	ENGINEERING NUMBER	DESCRIPTION	L [mm]	TOL. [mm]
1204040059	YR5J26E03C300	REC U12 5P AC MA PVC 0.3M PG9 FM WIR BRA	300	+40
1204040063	YR5J26E03C500	REC U12 5P AC MA PVC 0.5M PG9 FM WIR BRA	500	+40

PART LIST 8P AC

MOLEX P/N	ENGINEERING NUMBER	DESCRIPTION	L [mm]	TOL. [mm]
1204040060	YR8J26E02C300	REC U12 8P AC MA PVC 0.3M PG9 FM WIR BRA	300	+40
1204040064	YR8J26E02C500	REC U12 8P AC MA PVC 0.5M PG9 FM WIR BRA	500	+40

PART LIST 12P AC

MOLEX P/N	ENGINEERING NUMBER	DESCRIPTION	L [mm]	TOL. [mm]
1204040061	YRCJ26E01C300	REC U12 12P AC MA PVC 0.3M PG9FM WIR BRA	300	+40
1204040065	YRCJ26E01C500	REC U12 12P AC MA PVC 0.5M PG9FM WIR BRA	500	+40

PART LIST 4P DC

MOLEX P/N	ENGINEERING NUMBER	DESCRIPTION	L [mm]	TOL. [mm]
1204063009	ERYA2J26E03C300	REC U12 4P DC MA PVC 0.3M PG9 FM WIR BRA	300	+40
1204063010	ERYA2J26E03C500	REC U12 4P DC MA PVC 0.5M PG9 FM WIR BRA	500	+40

NOTES:

1. PARTS ACC. TO PRODUCT SPECIFICATION 1204000001 PS P10 AND IN STYLE OF IEC-61076-2-010
2. BOM: SEE SHEET 3
3. FOR THE ELECTRICAL RATINGS:
   DERATING HAS TO BE CONSIDERED
   OVERVOLTAGE CATEGORY: 3
   POLLUTION DEGREE: 3, ONLY IN MATED AND LOCKED CONDITION
4. MECHANICAL OPERATIONS: 100 CYCLES
5. MATES WITH M12 FEMALE CORDSETS
6. LABEL PRINTED WITH THE MOLEX AND ENGINEERING NUMBERS, VOLTS AND AMPERES, PRODUCTION DATE AND PRODUCTION ORDER NUMBER, UL/CSA MARKINGS AND COUNTRY OF ORIGIN LABEL APPLIED ON WHITE WIRE
7. PACKAGING: SINGLE PACKED IN BAG AND THE BAGS IN MOLEX STANDARD CARTONS
8. PANEL THICKNESS MAX. 4.0 mm.
9. RECOMMENDED PANEL CUTOUT: SEE PICTURE IN SHEET 1

THIS DRAWING CONTAINS INFORMATION THAT IS PROPRIETARY TO MOLEX ELECTRONIC TECHNOLOGIES, LLC AND SHOULD NOT BE USED WITHOUT WRITTEN PERMISSION

FUNCTIONAL SYMBOLS: FA = 0, FC = 0, FP = 0
DIVISIONAL SYMBOLS

DIMENSION UNITS	SCALE
mm	2:1

GENERAL TOLERANCES (UNLESS SPECIFIED)		
ANGULAR TOL	±	1.0 °
4 PLACES	±	0.0
3 PLACES	±	0.0
2 PLACES	±	0.05
1 PLACE	±	0.3
0 PLACES	±	0.5

DRAFT WHERE APPLICABLE MUST REMAIN WITHIN DIMENSIONS

CURRENT REV DESC: CHANGED MIN. TEMP. IN TABLE

EC NO: 736602
DRWN: RSCHIEBER 2023/01/30
CHK'D: RSILLER 2023/01/31
APPR: RSILLER 2023/01/31

INITIAL REVISION:
DRWN: JELIZAINCIN 2021/11/29
APPR: RSILLER 2022/07/14

THIRD ANGLE PROJECTION | DRAWING: A3-SIZE | SERIES: 120404

molex

REC U12 XP XC MA PVC XM PG9 FM WIR SE BRA AU

PRODUCT CUSTOMER DRAWING

DOCUMENT NUMBER	DOC TYPE	DOC PART	REVISION
1204040058	PSD	000	A2

MATERIAL NUMBER	CUSTOMER	SHEET NUMBER
SEE PART LIST	GENERAL MARKET	2 OF 3

DOCUMENT STATUS	P1	RELEASE DATE	2023/01/31 08:21:42

FORMAT: master-lb-prod-A3
REVISION: J
DATE: 2020/01/14

TABLE 1 - 4P A-CODE

ITEM	QTY	DESCRIPTION	MATERIAL	FINISH/COLOR
1	1	SHELL PG9/M12MA BRASS FM L17/W17 REC U12	BRASS	Ni
2	1	NUT PG9 BRASS NI HEX		
3	1	GASKET OR NBR BK	NBR	BLACK
4	1	MIC 4P REC INSERT A-CODE PA SHORT	PA	BLACK
5	4	CONTACT 10 MA	Cu ALLOY	Au
6	1	LABEL;SELF L.YELLOW(2.25X.75IN)	VINYL	YELLOW
7	-	POTTING MATERIAL	PUR	BEIGE
8	1	WIRE;22AWG;BU;1.58;PVC;17x0.16;UL1569	PVC	BLUE
9	1	WIRE;22AWG;BN;1.58;PVC;17x0.16;UL1569		BROWN
10	1	WIRE;22AWG;BK;1.58;PVC;17x0.16;UL1569		BLACK
11	1	WIRE;22AWG;WH;1.58;PVC;17x0.16;UL1569		WHITE

TABLE 2 - 5P A-CODE

ITEM	QTY	DESCRIPTION	MATERIAL	FINISH/COLOR
1	1	SHELL PG9/M12MA BRASS FM L17/W17 REC U12	BRASS	Ni
2	1	NUT PG9 BRASS NI HEX		
3	1	GASKET OR NBR BK	NBR	BLACK
4	1	MIC 5P REC INSERT A-CODE PA SHORT	PA	BLACK
5	5	CONTACT 10 MA	Cu ALLOY	Au
6	1	LABEL;SELF L.YELLOW(2.25X.75IN)	VINYL	YELLOW
7	-	POTTING MATERIAL	PUR	BEIGE
8	1	WIRE;22AWG;BU;1.58;PVC;17x0.16;UL1569	PVC	BLUE
9	1	WIRE;22AWG;BN;1.58;PVC;17x0.16;UL1569		BROWN
10	1	WIRE;22AWG;BK;1.58;PVC;17x0.16;UL1569		BLACK
11	1	WIRE;22AWG;WH;1.58;PVC;17x0.16;UL1569		WHITE
12	1	WIRE;20AWG;GN/YE;1.76;PVC;26x0.16;UL1569		GREEN/YELLOW

TABLE 3 - 8P A-CODE

ITEM	QTY	DESCRIPTION	MATERIAL	FINISH/COLOR
1	1	SHELL PG9/M12MA BRASS FM L17/W17 REC U12	BRASS	Ni
2	1	NUT PG9 BRASS NI HEX		
3	1	GASKET OR NBR BK	NBR	BLACK
4	1	MIC 8P REC INSERT MALE PA SHORT	PA	BLACK
5	8	CONTACT 8 MA	BRASS	Au
6	1	LABEL;SELF L.YELLOW(2.25X.75IN)	VINYL	YELLOW
7	-	POTTING MATERIAL	PUR	BEIGE
8	1	WIRE;24AWG;BU;1.43;PVC;11x0.16;UL1569	PVC	BLUE
9	1	WIRE;24AWG;BN;1.43;PVC;11x0.16;UL1569		BROWN
10	1	WIRE;24AWG;YE;1.43;PVC;11x0.16;UL1569		YELLOW
11	1	WIRE;24AWG;GN;1.43;PVC;11x0.16;UL1569		GREEN
12	1	WIRE;24AWG;GY;1.43;PVC;11x0.16;UL1569		GREY
13	1	WIRE;24AWG;PK;1.43;PVC;11x0.16;UL1569		PINK
14	1	WIRE;24AWG;RD;1.43;PVC;11x0.16;UL1569		RED
15	1	WIRE;24AWG;WH;1.43;PVC;11x0.16;UL1569		WHITE

TABLE 4 - 12P A-CODE

ITEM	QTY	DESCRIPTION	MATERIAL	FINISH/COLOR
1	1	SHELL PG9/M12MA BRASS FM L17/W17 REC U12	BRASS	Ni
2	1	NUT PG9 BRASS NI HEX		
3	1	GASKET OR NBR BK	NBR	BLACK
4	1	MIC 12P REC INSERT MALE PA SHORT	PA	BLACK
5	12	CONTACT 06 MA	BRASS	Au
6	1	LABEL;SELF L.YELLOW(2.25X.75IN)	VINYL	YELLOW
7	-	POTTING MATERIAL	PUR	BEIGE
8	1	WIRE;26AWG;BU;1.30;PVC;7x0.16;UL1569	PVC	BLUE
9	1	WIRE;26AWG;BN;1.30;PVC;7x0.16;UL1569		BROWN
10	1	WIRE;26AWG;YE;1.30;PVC;7x0.16;UL1569		YELLOW
11	1	WIRE;26AWG;GN;1.30;PVC;7x0.16;UL1569		GREEN
12	1	WIRE;26AWG;GY;1.30;PVC;7x0.16;UL1569		GREY
13	1	WIRE;26AWG;PK;1.30;PVC;7x0.16;UL1569		PINK
14	1	WIRE;26AWG;RD;1.30;PVC;7x0.16;UL1569		RED
15	1	WIRE;26AWG;BK;1.30;PVC;7x0.16;UL1569		BLACK
16	1	WIRE;26AWG;VT;1.30;PVC;7x0.16;UL1569		VIOLET
17	1	WIRE;26AWG;WH;1.30;PVC;7x0.16;UL1569		WHITE
18	1	WIRE;26AWG;GY/PK;1.30;PVC;7x0.16;UL1569		GREY/PINK
19	1	WIRE;26AWG;RD/BU;1.30;PVC;7x0.16;UL1569		RED/BLUE

TABLE 5 - 4P D-CODE

ITEM	QTY	DESCRIPTION	MATERIAL	FINISH/COLOR
1	1	SHELL PG9/M12MA BRASS FM L17/W17 REC U12	BRASS	Ni
2	1	NUT PG9 BRASS NI HEX		
3	1	GASKET OR NBR BK	NBR	BLACK
4	1	MIC 4P REC INSERT D-CODE PA SHORT	PA	BLACK
5	4	CONTACT 10 MA	Cu ALLOY	Au
6	1	LABEL;SELF L.YELLOW(2.25X.75IN)	VINYL	YELLOW
7	-	POTTING MATERIAL	PUR	BEIGE
8	1	WIRE;22AWG;BU;1.58;PVC;17x0.16;UL1569	PVC	BLUE
9	1	WIRE;22AWG;OG;1.58;PVC;17x0.16;UL1569		ORANGE
10	1	WIRE;22AWG;YE;1.58;PVC;17x0.16;UL1569		YELLOW
11	1	WIRE;22AWG;WH;1.58;PVC;17x0.16;UL1569		WHITE

THIS DRAWING CONTAINS INFORMATION THAT IS PROPRIETARY TO MOLEX ELECTRONIC TECHNOLOGIES, LLC AND SHOULD NOT BE USED WITHOUT WRITTEN PERMISSION

FUNCTIONAL SYMBOLS: FA = 0, FC = 0, FP = 0

DIVISIONAL SYMBOLS

DIMENSION UNITS: mm
SCALE: 1:1

GENERAL TOLERANCES (UNLESS SPECIFIED)

ANGULAR TOL	±	1.0 °
4 PLACES	±	0.0
3 PLACES	±	0.0
2 PLACES	±	0.05
1 PLACE	±	0.3
0 PLACES	±	0.5

DRAFT WHERE APPLICABLE MUST REMAIN WITHIN DIMENSIONS

CURRENT REV DESC: CHANGED MIN. TEMP. IN TABLE

EC NO: 736602
DRWN: RSCHIEBER 2023/01/30
CHK'D: RSILLER 2023/01/31
APPR: RSILLER 2023/01/31

INITIAL REVISION:
DRWN: JELIZAINCIN 2021/11/29
APPR: RSILLER 2022/07/14

THIRD ANGLE PROJECTION

DRAWING: A3-SIZE
SERIES: 120404

molex

REC U12 XP XC MA PVC XM PG9 FM WIR SE BRA AU

PRODUCT CUSTOMER DRAWING

DOCUMENT NUMBER	DOC TYPE	DOC PART	REVISION
1204040058	PSD	000	A2

MATERIAL NUMBER	CUSTOMER	SHEET NUMBER
SEE PART LIST	GENERAL MARKET	3 OF 3

DOCUMENT STATUS	P1	RELEASE DATE	2023/01/31 08:21:42

FORMAT: master-tb-prod-A3
REVISION: J
DATE: 2020/01/14