THIS DRAWING IS UNPUBLISHED. RELEASED FOR PUBLICATION 20
© COPYRIGHT 20 BY - ALL RIGHTS RESERVED.

REVISIONS

P	LTR	DESCRIPTION	DATE	DWN	APVD
	B1	ADD NEW CODING	27JUN16	J.Z	S.W
	B2	CHANGE P/N, ECR-17-012597	05SEP17	C.N	I.Y
	B3	ECR-19-004608	25MAR19	S.C	I.Y
	B4	ECR-20-007109	19MAY20	S.C	I.Y

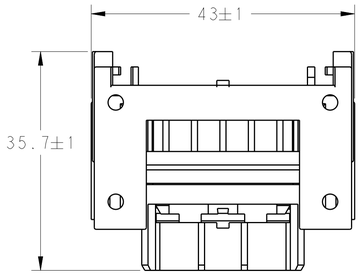

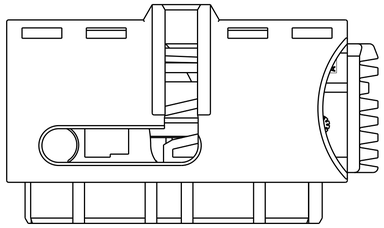

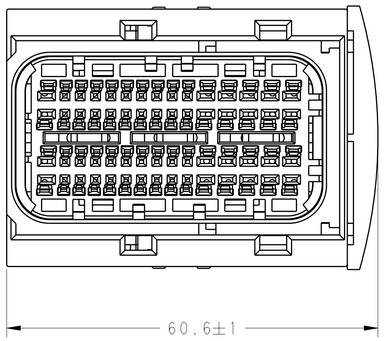

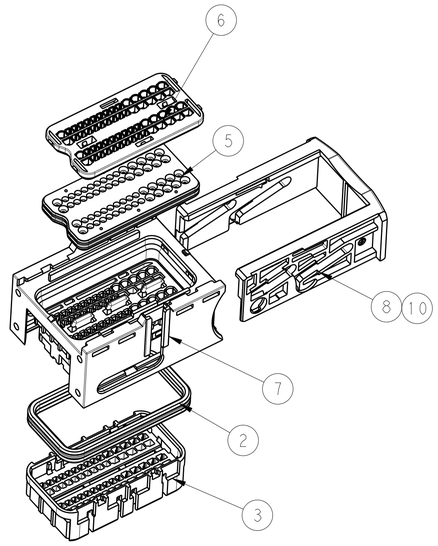

SCALE 1:1

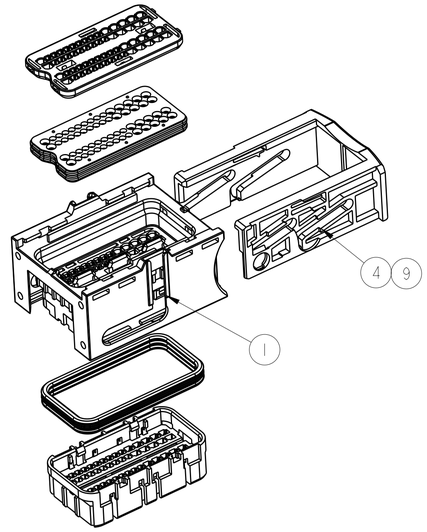

SCALE 1:1

NOTES:

1. SUITABLE CONTACTS SEE BELOW DRAWINGS:

   MQS 0.63mm(CLEAN BODY): 968220, 968221, 1534116, 1703282.
   SUITABLE WIRE SIZE FROM 0.35mm2 TO 0.75mm2,
   INSULATION OUTER DIAMETER RANGE FROM 1.2 TO 1.9mm.
   MQS 1.5mm(CLEAN BODY): 1241608
   SUITABLE WIRE SIZE FROM 0.75mm2 TO 1.5mm2,
   SUITABLE WIRE INSULATION OUTER DIAMETER RANGE FROM 1.4 TO 2.4mm.

2. SEALING PLUG P/N: 1394871-1(0.63mm), 1394872-1(1.5mm)

3. SUITABLE RETAINER P/N: 6-1355118-1.

B4 4. SUITABLE COVER P/N: 2137753-1/2, 6-1394908-1(7-1394908-3), 2300725-1

5. 0/2-2209544-1/9 CAN MATING WITH LEVER 2137752-1/6;
   1/3-2209544-1/9 CAN MATING WITH LEVER 2305001-1/6;

CODINGS FOR B3
0/1-2209544-1
2/3-2209544-1

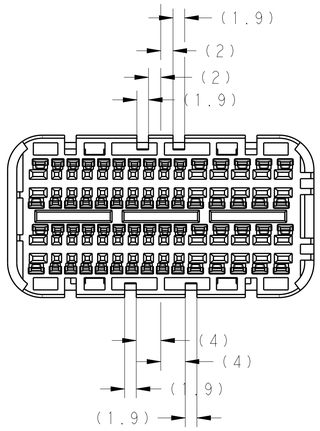

CODINGS FOR B3
0/1-2209544-9
2/3-2209544-9

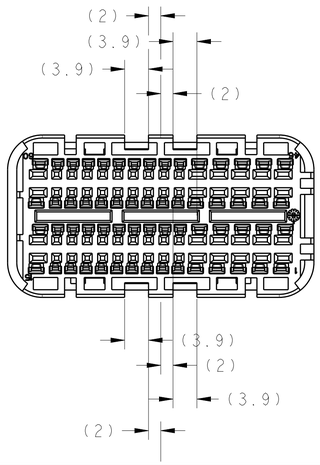

QTY	QTY	QTY	QTY	QTY	QTY	QTY	QTY	MATERIAL	COLOUR	DESCRIPTION	ITEM
1	1	1	1	1	1	1	1	PBT GF	BLACK	SEALING HOLDER	6
1	1	1	1	1	1	1	1	SILICONE	LIGHT BLUE	FAMILY SEAL	5
				1	1			PA66 GF	BLACK	SLIDE(CUT)	8
						1	1	PA66 GF	BLACK	SLIDE	4
1	1							PA6 GF	BLACK	SLIDE(CUT)	10
		1	1					PA6 GF	BLACK	SLIDE	9
1		1		1		1		PBT GF	WATER BLUE	CAVITY BLOCK (GENERAL CODING)	3
	1		1		1		1	PBT GF	BLUE	CAVITY BLOCK (CODING G)	3
1	1	1	1	1	1	1	1	SILICONE	ORANGE	SEALING	2
1	1			1	1			PBT/ASA GF	BLACK	CARRIER HOUSING (ENHANCED)	7
		1	1			1	1	PBT/ASA GF	BLACK	CARRIER HOUSING (ICT)	1
3-2209544-9	3-2209544-1	2-2209544-9	2-2209544-1	1-2209544-9	1-2209544-1	0-2209544-9	0-2209544-1	P/N			
B	B	B	B	B	B	B	B	REV			
LEVER ENHANCED VERSION		ICT VERSION		LEVER ENHANCED VERSION		ICT VERSION					

THIS DRAWING IS A CONTROLLED DOCUMENT.

DIMENSIONS: mm

TOLERANCES UNLESS OTHERWISE SPECIFIED:
0 PLC ±.5
1 PLC ±0.1
2 PLC ±0.13
3 PLC ±0.013
4 PLC ±0.0051
ANGLES ±1

MATERIAL -
FINISH -

DWN	J.LI	26MAY14
CHK	Z.ZHOU	27MAY14
APVD	L.YIN	5JUN14
PRODUCT SPEC		
APPLICATION SPEC		
WEIGHT		

CUSTOMER DRAWING

TE Connectivity

NAME: CONNECTOR HOUSING, 60P, MQS CB MQS CB+ MCP2.8K
-

SIZE	CAGE CODE	DRAWING NO	RESTRICTED TO
A1	-	C-2209544	-

SCALE 2:1 SHEET 1 OF 1 REV B4

4805 (3/13)