CONFIDENTIAL: THIS COPY IS PROVIDED ON A RESTRICTED BASIS AND IS NOT TO BE USED IN ANY WAY DETRIMENTAL TO THE INTERESTS OF PANCON.

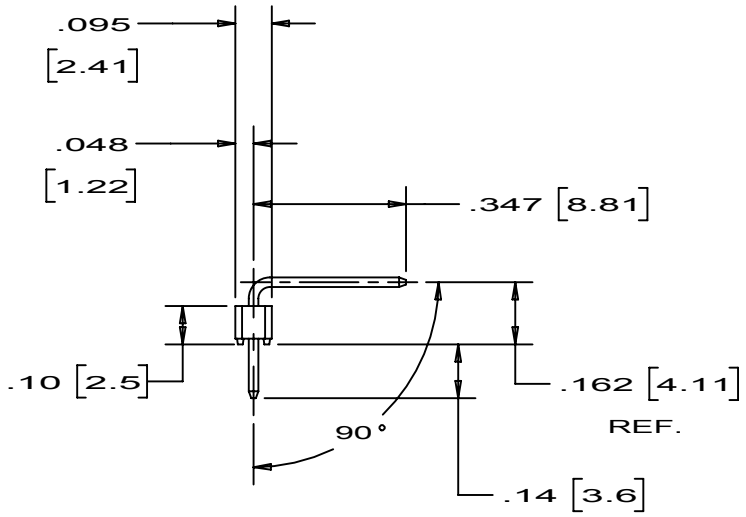

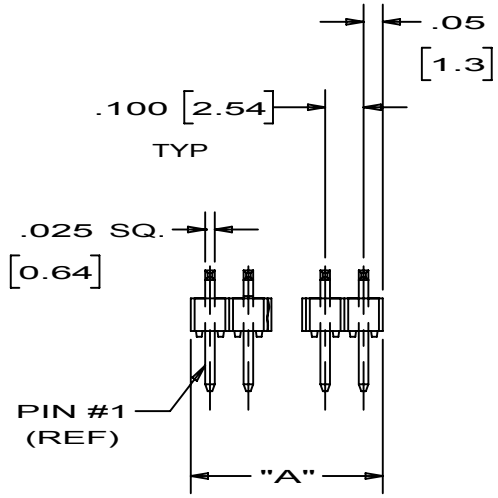

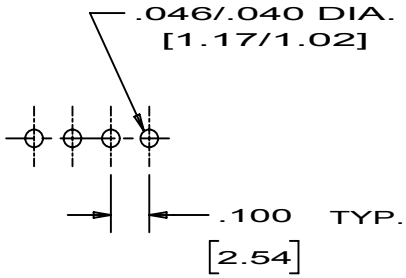

RECOMMENDED
P.C. BOARD LAYOUT

NOTES:

* 1. SEE CURRENT PRICE SHEET FOR PART NUMBER SUFFIX DESIGNATION FOR PACKAGE SIZE.
2. POST MATERIAL: BRASS ALLOY, BRIGHT ACID TIN OVER NICKEL PLATING
3. WAFER MATERIAL: THERMOPLASTIC U.L. 94V-O
4. ALL DIMENSIONS SHOWN IN INCHES & [MILLIMETERS]

U.L. RECOGNIZED: #E73711

RoHS Compliant

REV	DATE	BY	CHK	DESCRIPTION	CN - R	CUST	SUP
14	6/23/10	SHC		ADDED PDNI PLATING ALTERNATIVE			

PANCON CONNECTORS
www.pancon.de / GERMANY
www.panconconnectors.com / USA

Bolingbrook, Illinois

MAS-CON®, .100" FLAT HEADER WITH RIGHT ANGLED PINS

UNLESS OTHERWISE SPECIFIED, DIMENSIONAL TOLERANCES ARE:
(.X) ± -----(.XXX) ± .005 [.1]
(.XX) ±.02 [.5] ANGLES ± 5°

UNLESS OTHERWISE SPECIFIED, ALL DIMENSIONS ARE GIVEN IN INCHES. THIRD ANGLE PROJECTION.

DRAWN BY: LE
MAT'L: SEE NOTES 2 & 3
SCALE: 2:1
DATE: 9-18-91
DRAWING NO.: KA-10218 SHT 1 OF 2
DWG. SIZE: A
CHK'D: TOG

THIS COPY IS PROVIDED ON A RESTRICTED BASIS AND IS NOT TO BE USED IN ANY WAY DETRIMENTAL TO THE INTERESTS OF PANCON.

* PART NUMBER	No. OF CIRCUITS	DIM "A" IN. [MM]	WT./100 PCS. LBS. [GRAMS]
MFAS100-2	2	.20 [5.1]	.03 [14.3]
MFAS100-3	3	.30 [7.6]	.04 [21.4]
MFAS100-4	4	.40 [10.2]	.06 [28.5]
MFAS100-5	5	.50 [12.7]	.07 [35.7]
MFAS100-6	6	.60 [15.2]	.09 [42.8]
MFAS100-7	7	.70 [17.8]	.11 [50.0]
MFAS100-8	8	.80 [20.3]	.12 [57.1]
MFAS100-9	9	.90 [22.9]	.14 [64.2]
MFAS100-10	10	1.00 [25.4]	.15 [71.4]
MFAS100-11	11	1.10 [27.9]	.17 [78.5]
MFAS100-12	12	1.20 [30.5]	.18 [85.6]
MFAS100-13	13	1.30 [33.0]	.20 [92.8]
MFAS100-14	14	1.40 [35.6]	.22 [100.0]
MFAS100-15	15	1.50 [38.1]	.23 [107.0]
MFAS100-16	16	1.60 [40.6]	.25 [114.1]
MFAS100-17	17	1.70 [43.2]	.26 [121.2]
MFAS100-18	18	1.80 [45.7]	.28 [128.4]
MFAS100-19	19	1.90 [48.8]	.30 [135.5]

* PART NUMBER	No. OF CIRCUITS	DIM "A" IN. [MM]	WT./100 PCS. LBS. [GRAMS]
MFAS100-20	20	2.00 [50.8]	.31 [142.6]
MFAS100-21	21	2.10 [53.3]	.33 [149.8]
MFAS100-22	22	2.20 [55.9]	.34 [157.0]
MFAS100-23	23	2.30 [58.4]	.36 [164.0]
MFAS100-24	24	2.40 [61.0]	.37 [171.1]
MFAS100-25	25	2.50 [63.5]	.39 [178.2]
MFAS100-26	26	2.60 [66.0]	.40 [185.4]
MFAS100-27	27	2.70 [68.6]	.42 [192.5]
MFAS100-28	28	2.80 [71.1]	.44 [199.6]
MFAS100-29	29	2.90 [73.7]	.45 [206.8]
MFAS100-30	30	3.00 [76.2]	.47 [213.9]
MFAS100-31	31	3.10 [78.7]	.48 [221.0]
MFAS100-32	32	3.20 [81.3]	.50 [228.2]
MFAS100-33	33	3.30 [83.8]	.51 [235.3]
MFAS100-34	34	3.40 [86.4]	.53 [242.4]
MFAS100-35	35	3.50 [88.9]	.54 [249.5]
MFAS100-36	36	3.60 [91.4]	.55 [252.6]

* SEE NOTE #1

MFAS100-XX-XX

CIRCUIT SIZE
02 THRU 36

PACK CODE
SEE PRICE SHEET

BLANK = 200m" Sn
B = 15m" AU OR
AU FLASH OVER 12m" PDNI

REV	DATE	BY	CHK	DESCRIPTION	CN - R	CUST	SUP
14				SEE SHEET 1			

PANCON CONNECTORS
www.pancon.de / GERMANY
www.panconconnectors.com / USA

Bolingbrook, Illinois

MAS-CON®, .100" FLAT HEADER
WITH RIGHT ANGLED PINS

UNLESS OTHERWISE SPECIFIED, DIMENSIONAL TOLERANCES ARE:
(.X) ± _____(.XXX) ± .005 [.1]
(.XX) ±.02 [.5] ANGLES ± 5°

UNLESS OTHERWISE SPECIFIED, ALL DIMENSIONS ARE GIVEN IN INCHES.
THIRD ANGLE PROJECTION.

DRAWN BY: LE
MAT'L: SEE NOTES 2 & 3
SCALE: 2:1
DATE: 9-18-91
CHK'D: TOG
DRAWING NO.: KA-10218 SHT 2 OF 2
DWG. SIZE: A