QG2442S

2.5G Single Port Transformer Module

EN

1. Designed for long haul 2.5G Single Port Transformer Module
2. Supports four pairs of category 5 UTP cable,Cable interface for isolation and low common mode emissions.
3 . Low profile Surface Mount Packaging designed for Hi-Temp Reflow Process
4. Compliant with IEEE 802.3bz standard for 2.5G Base-Z,Designed to support 1:1 Turns Ratio Transceivers.

DIMENSIONS & SCHEMATICS

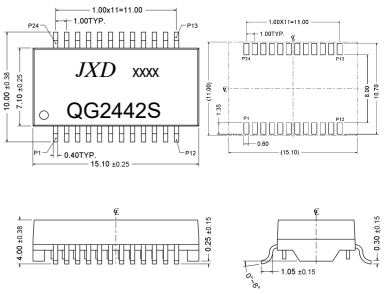

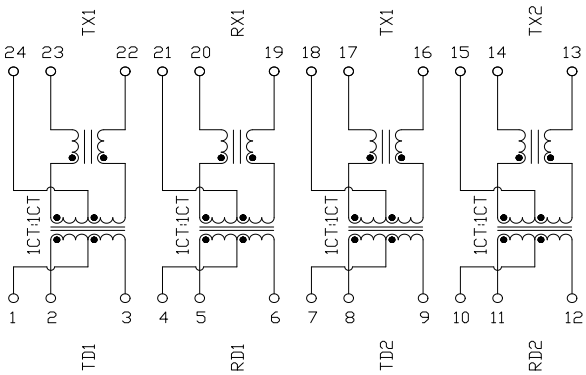

Note:
1、Dimension：mm
2、Unless otherwise specified,all tolerances are：±0.15mm

TECHNICAL SPECIFICATIONS

OCL :	180 μH Min. @ 100 KHz, 100mV with 8mA DC Bias
Leakage Inductance:	0.5 μH Max. @ 100KHz, 0.1V
Cw/w:	35 pF Max. @ 100KHz, 0.1V
DCR:	1.20Ω Max
Turns Ratio(±5%):	1CT:1(TX), 1CT:1(RX)
Polarity:	1-24, 5-20, 7-18, 11-14 In-Phase
Insertion Loss:	-1.0 dB Max. @ 1-100MHz
	-2.0 dB Max. @ 101-200MHz
Return Loss:	-20 dB Min. @ 1-40MHz
	-20+15*LOG(f/40) dB Min. @ 41-200 MHz
Cross Talk:	-39 dB Min.@ 1-100 MHz
	-25 dB Min.@ 101-200 MHz
Common Mode Rejection :	-25dB Min.@ 1-200 MHz
Isolation HI-POT:	1500Vrms 1mA 2 Second
Operating Temperature range:	-40℃～+85℃
	-40℃～+125℃

PACKING SPECIFICATION

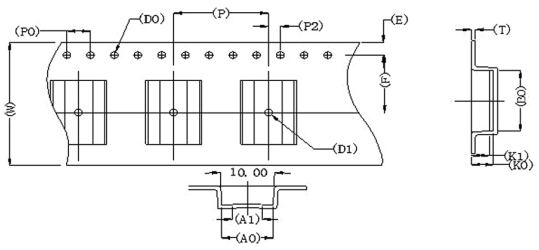

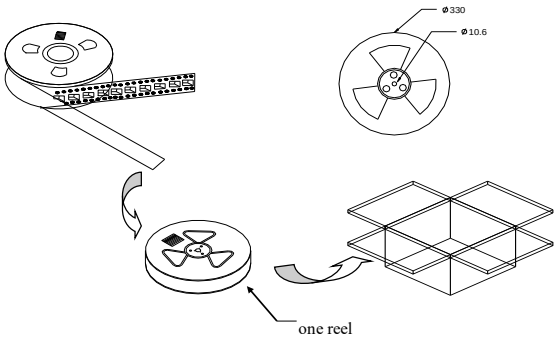

1. units/reel:850PCS
2 reel/carton:5PCS
3.units/carton :4250PCS

Shenzhen magnetic Lianda Electronics Co., LTD

Address: 505, West Block, No. 221, Niucheng Road, Niucheng Village, Baiwang Community, Xili Street, Nanshan District, Shenzhen
E-mail: sales1@cd-tek.com 0755-27652992 29016433 Website:www.cd-tek.com