ORDER NO.	WOODHEAD NO.	COLOR
130146-0193	15W33-P	YELLOW
130146-0194	15W33BLK-P	BLACK

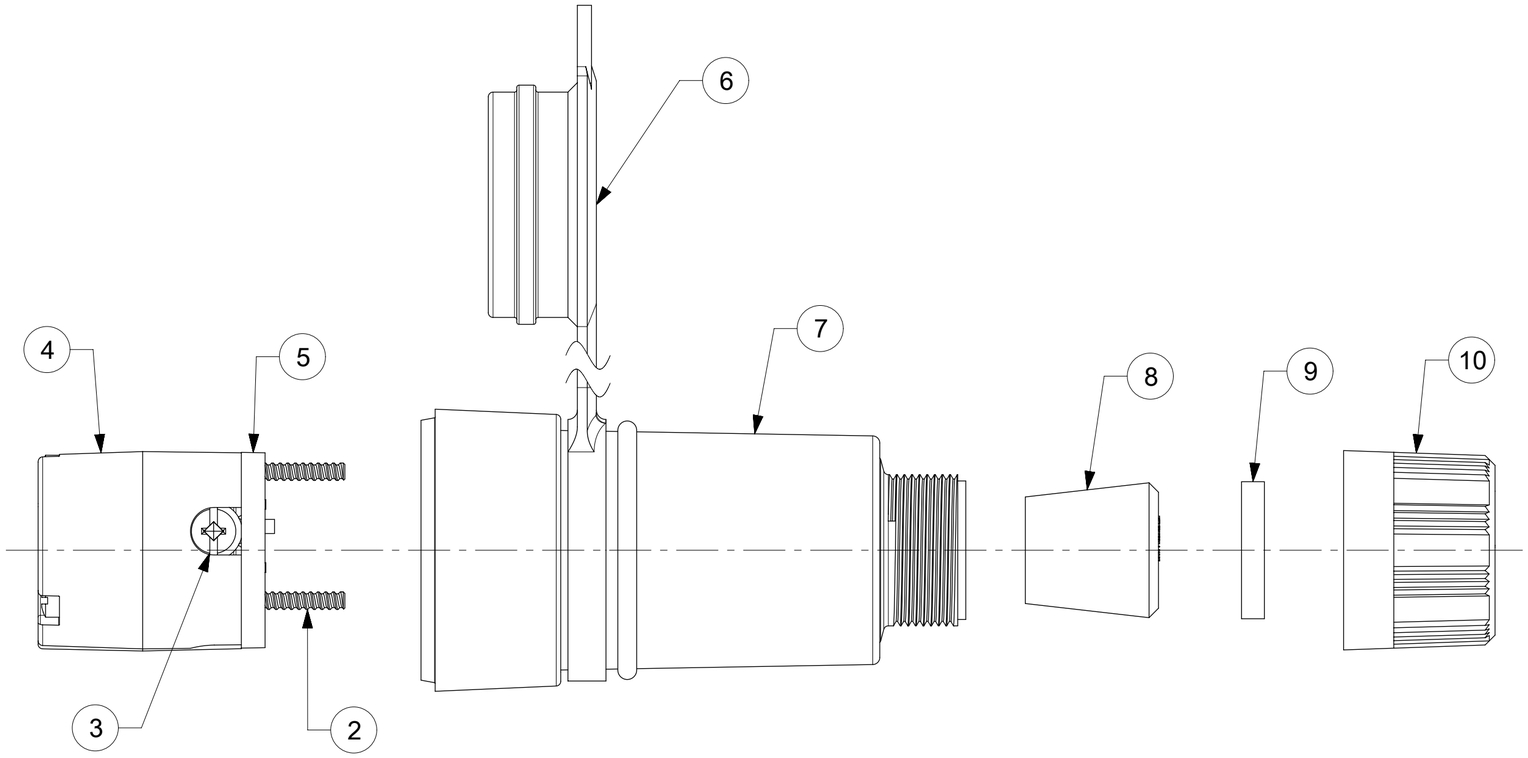

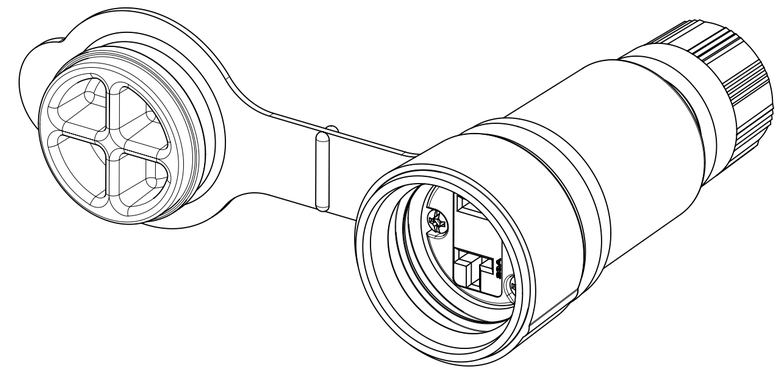

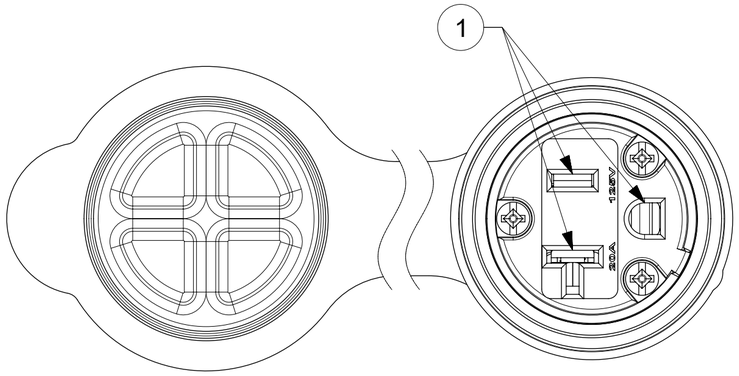

FACE VIEW

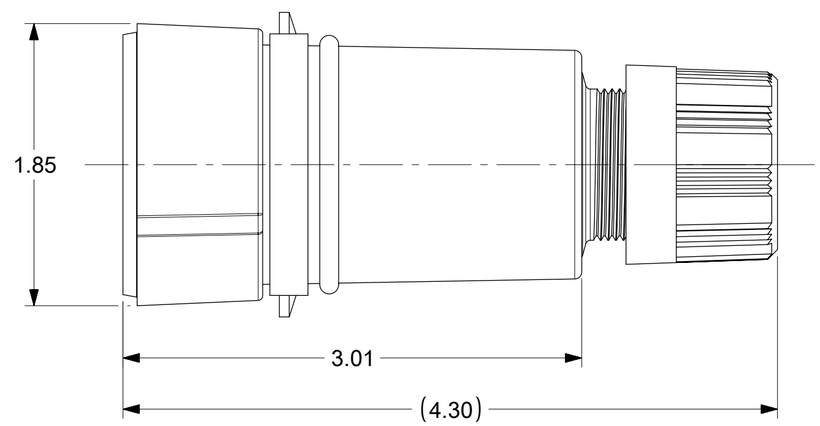

ITEM NO.	DESCRIPTIONS	MATERIAL	QTY.
1	BLADES	BRASS	3
2	RETAINING SCREWS	STAINLESS STEEL	3
3	TERMINAL SCREWS	BRASS, ZINC PLATED	3
4	INSERT	NYLON	1
5	TERMINAL COVER	POLYCARBONATE	1
6	FLIP COVER	SILICON	1
7	HOUSING	RUBBER WITH NYLON THREAD	1
8	GROMMETS	RUBBER	5
9	FRICTION RING	NYLON	1
10	COMPRESSION NUT	NYLON	1

DOCUMENT STATUS	P1	RELEASE DATE	2019/03/21 12:40:22

NOTES:
1. SEE INSTRUCTION SHEET NUMBER 1301414770 FOR PRODUCT SPECIFICATION.
2. CABLE RANGE FROM 0.375" TO 0.625"

THIS DRAWING CONTAINS INFORMATION THAT IS PROPRIETARY TO MOLEX ELECTRONIC TECHNOLOGIES, LLC AND SHOULD NOT BE USED WITHOUT WRITTEN PERMISSION

SYMBOLS	DIMENSION UNITS	SCALE
FA = 0	INCH	NTS
FC = 0	GENERAL TOLERANCES (UNLESS SPECIFIED)	
FP = 0	ANGULAR TOL	± 0.5 °
S = 0	4 PLACES	±
▼ = 0	3 PLACES	± 0.005
C = 0	2 PLACES	± 0.01
☒ = 0	1 PLACE	± 0.02
■ = 0	0 PLACES	±
V = 0	DRAFT WHERE APPLICABLE MUST REMAIN WITHIN DIMENSIONS	

CURRENT REV DESC: RELEASED

EC NO:	613681	
DRWN:	ABABU01	2018/11/13
CHK'D:	DNGUYEN62	2019/03/13
APPR:	HKNEELAND	2019/03/21

INITIAL REVISION:

DRWN:	ABABU01	2018/11/13
APPR:	HKNEELAND	2019/03/21

THIRD ANGLE PROJECTION | DRAWING: C-SIZE | SERIES: 130146

molex

WATERTITE CONNECTOR, 5-20R

PRODUCT CUSTOMER DRAWING

DOCUMENT NUMBER	DOC TYPE	DOC PART	REVISION
1301460193	PSD	000	A

MATERIAL NUMBER	CUSTOMER	SHEET NUMBER
SEE TABLE	GENERAL MARKET	1 OF 1

FORMAT: Bi-print-C
REVISION: H
DATE: 2018/01/18