750-535

2-Channel Digital Output Module 24 V DC, Ex i

Short-circuit protected; PNP-positive switching

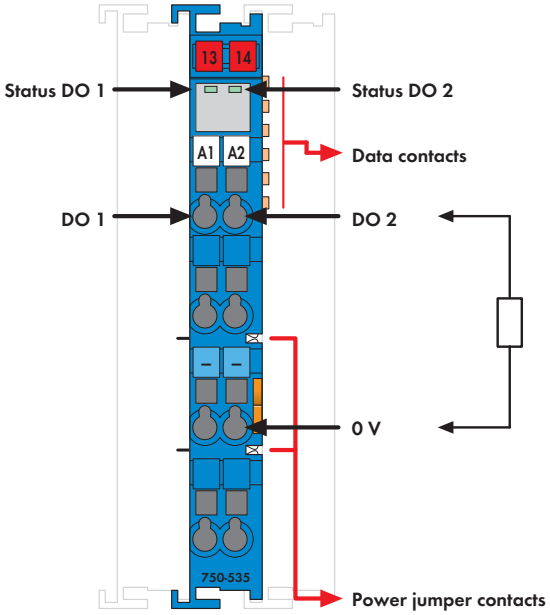

Delivered without miniature WSB markers

The digital output module controls actuators in hazardous Zone 0+1. such as intrinsically safe magnetic valves.
The WAGO-I/O-SYSTEM 750 must be installed either in Zone 2 or in a non-hazardous area.
All outputs are electronically short-circuit-protected.

LED displays:
- Green LED (output status)

Field and system levels are electrically isolated.

Note: The digital output module must only be operated via Ex i 24VDC power supply!

General information (e.g., installation regulations) on explosion protection is available in the WAGO-I/O-SYSTEM 750 manuals!

Description	Item No.	Pack. Unit
2DO 24V DC Ex i	**750-535**	1

Accessories		Item No.	Pack. Unit
Miniature WSB Quick marking system			
	plain	**248-501**	5
	with marking	see Section 11	

Technical Data	
No. of outputs	2
Current consumption, system voltage typ.	
(5 VDC)	7 mA
Voltage via power jumper contacts	24 V DC (provided via Ex-i supply U_O = max. 27.3 V)
Type of load	resistive, inductive, lamps
Max. switching frequency	1 kHz
Output voltage	24 V DC
Internal resistance R_i	285 Ω
Current consumption, power jumper contact typ. (24 VDC)	8,5 mA / module + load
Power consumption $P_{max.}$	2.1 W (with an output current of 40 mA)
Power loss P_V	1.1 W (with an output current of 40 mA)
Isolation	U_M = 375 V system/supply
Bit width	2 bits (status)

Downloaded from Arrow.com.

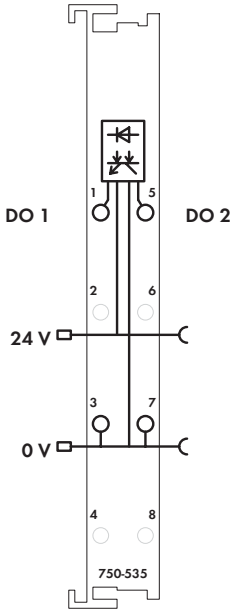

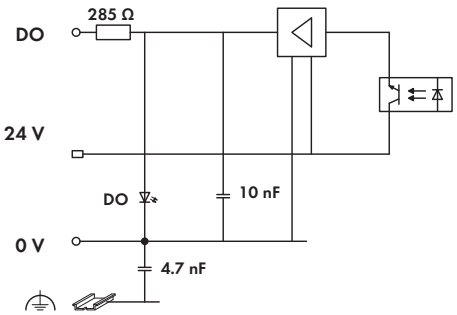

Technical Data

Wire connection	CAGE CLAMP®
Cross sections	0.08 mm² ... 2.5 mm² / AWG 28 ... 14
Strip lengths	8 ... 9 mm / 0.33 in
Width	12 mm
Weight	49.5 g
EMC immunity of interference	acc. to EN 61000-6-2, marine applications
EMC emission of interference	acc. to EN 61000-6-3, marine applications

Explosion Protection

Electric circuit, safety-relevant data	U_o = 27.3 V ; I_o = 106 mA; P_o = 723 mW; Characteristic: Linear
Reactances Ex ia IIC	L_o = 3 mH; C_o = 88 nF
Reactances Ex ia IIB	L_o = 12 mH; C_o = 680 nF
Reactances Ex ia IIA	L_o = 18 mH; C_o = 2.2 µF
Reactances Ex ia I	L_o = 20 mH; C_o = 3.6 µF
Reactances	(The above-listed ratings do not account for the coincidental occurrence of capacitances and inductances. For ratings taking the coincidental occurrence of capacitances and inductances into account, see manual)

Standards, Guidelines and Approvals

Conformity marking	CE
ATEX Guideline 94 / 9 / EC	EN 60079-0, EN 60079-11, EN 60079-15, EN 60079-26, EN 60079-31
EC EMC guideline	2004/108/EC
Korea Certification	KC
Marine applications	ABS, BV, DNV, GL, KR, LR, NKK, PRS, RINA
cULus UL 508	
cULus ANSI/ISA 12.12.01	Class I, Div. 2, Grp. ABCD, T4
TÜV 14.1911 X	Ex d [ia Ma] I Mb, Ex nA [ia Ga] IIC T4 Gc, Ex tc [ia Da] IIIC T135 °C Dc
Ex TÜV 12 ATEX 106032 X	I M2 (M1) Ex d [ia Ma] I Mb, II 3 (1) G Ex nA [ia Ga] IIC T4 Gc, II 3 (1) D Ex tc [ia Da] IIC T135°C Dc
IECEx TUN 12.0039 X	Ex d [ia Ma] I Mb, Ex nA [ia Ga] IIC T4 Gc, Ex tc [ia Da] IIC T135°C Dc

Downloaded from Arrow.com.