REVISIONS					
REV.	ECN NO.	LOCATION	DESCRIPTION	DATE	DESIGN
A0	N/A		INITIAL RELEASE	/	/
A1	ECN-P-202410017		注塑模具翻新，按实物修正产品尺寸，图框升级	2024.10.28	桑 甚

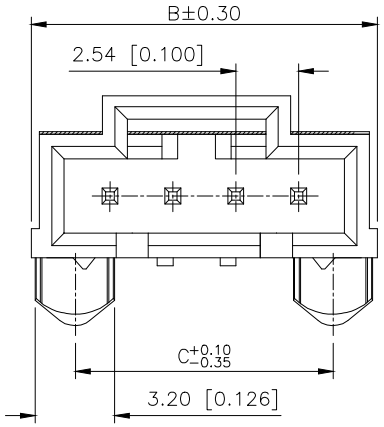

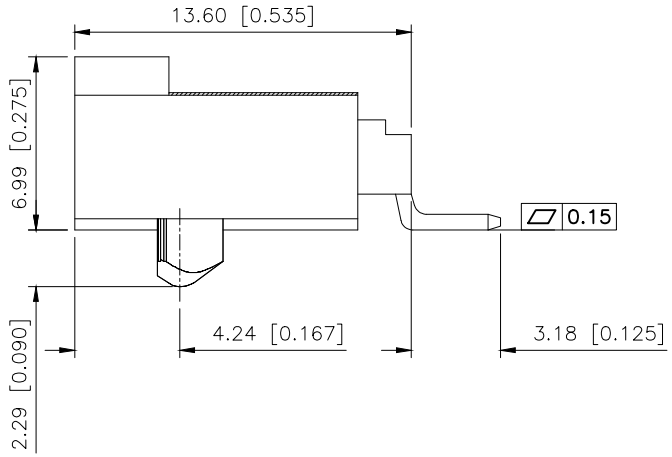

■SPECIFICATIONS
- •Voltage rating:250V AC/DC
- •Current rating:3A AC/DC
- •Withstanding Voltage:1500V AC/minute
- •Temperature range:−40°C~+125°C
- •Insulation resistance:≥1000MΩ
- •Contact resistance:≤20mΩ
- •After environmental testing:≤30mΩ

PART NO.:

X9566 W R S−XX−9T XX XX
① ② ③ ④ ⑤ ⑥ ⑦ ⑧

①Series No
②Category:W−Wafer
③Welding Board Angle:R−Stright 90°
④Welding Way: S−SMT
⑤Row No.Pin No:XX−02~12Pin
⑥Material:9T−PA9T UL94V−0
⑦Planting: V01:Gold Plated 1u"
⑧Color：Blank−Natural Color

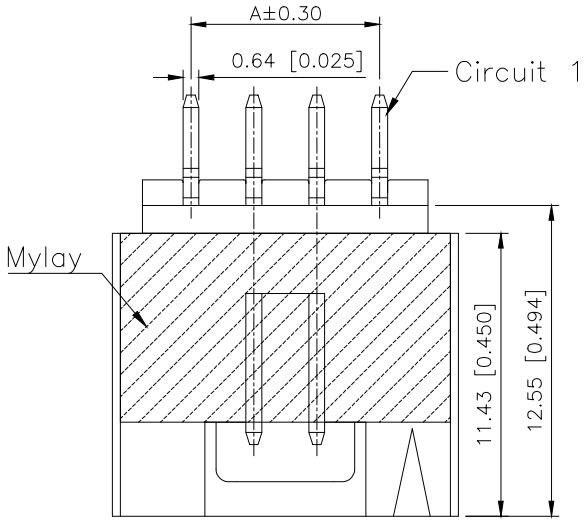

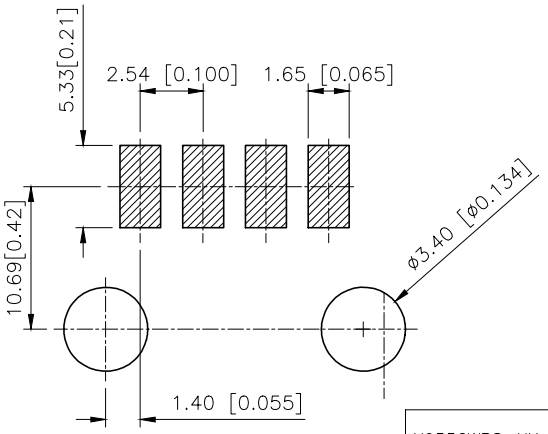

PCB LAYOUT

Poles	Dimensions(mm)			Poles	Dimensions(mm)		
	A	B	C		A	B	C
02	2.54	8.89	5.33	08	17.78	24.13	20.57
03	5.08	11.43	7.87	09	20.32	26.67	23.11
04	7.62	13.97	10.41	10	22.86	29.21	25.65
05	10.16	16.51	12.95	11	25.40	31.75	28.19
06	12.70	19.05	15.49	12	27.94	34.29	30.73
07	15.24	21.59	18.03				

PART NO	Material	Material(Pin)	Finish(Pin)	Mates With XKB Housing
X9556WRS−XX−9TV01	PA9T UL 94V−0	Brass	Gold−Flash	X9556H

AuGLAR	±5°
X.	±0.40
X.x	±0.30
X.xx	±0.20
X.xxx	±0.15
UNSPECIFIED TOLERAuCES	

XKB Connection 星城

DESIGN	桑 甚	VIEW:	MODEL TYPE: 2.54mm Crimp Style Connector
CHECKED		UNIT: mm/in	PART NO.: X9556WRS−XX−9TV01
APPROVED		SIZE: A4	DWG NO.:

XKB INDUSTRIAL PRECISION CO.,LIMITED

SCALE	PAGE	REVISION
N/A	1/1	A1