ROHS

TER' \ ANG.	(20°)	(15°)	0°	(15°)	(20°)
①	▨				
②				▨	▨
③	▨	▨	▨	▨	▨

(▨=NO)

CCW ← → CW

CODE TABLE

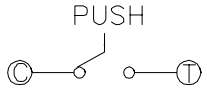

Circuit Diagram

NOTE:
Operating Force:
lever portion 100 ± 30 gf
Push portion 205 ± 50 gf

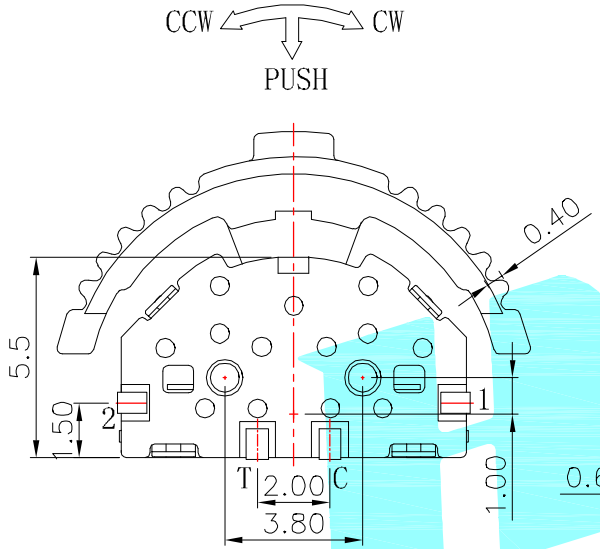

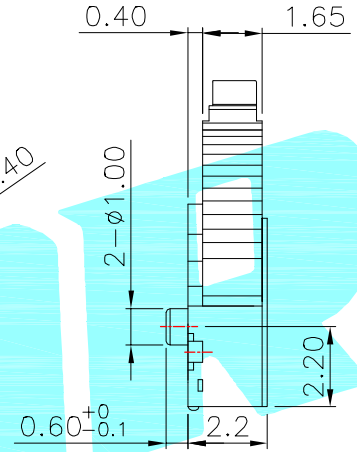

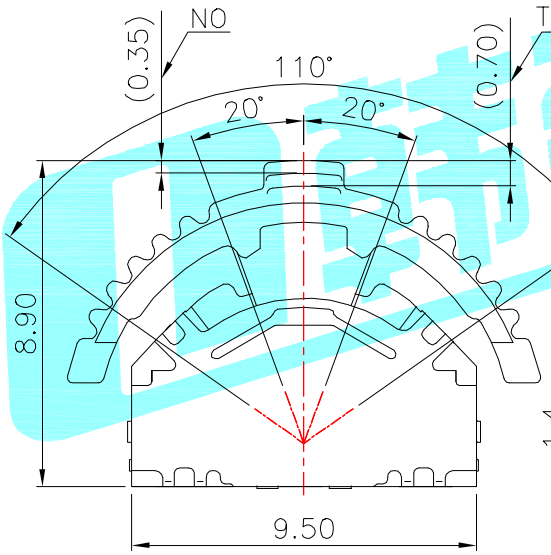

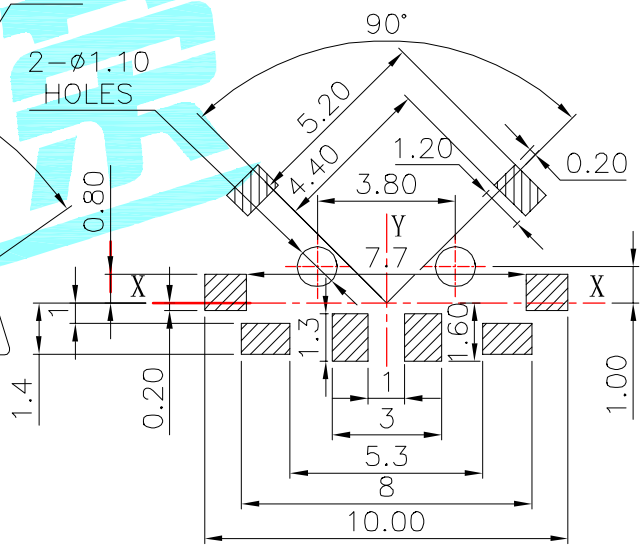

P.C.B Mounting
Pattern Dimension

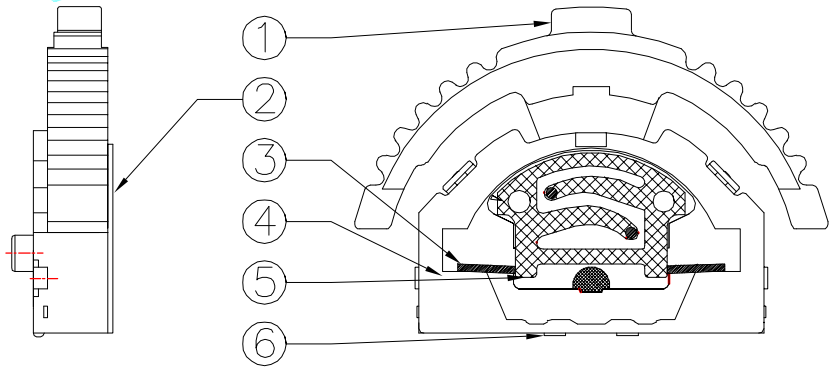

ITEM	PART NAME	TER'NO.	QTY.	MATERIAL	FINISHING	REMARK
⑥	Contact	——	1	F.Ag/Brass	——	——
⑤	Terminal	——	4	Brass(0.15t)	Plating silver	——
④	Base	——	1	Nylon	Black	
③	Spring		1	SUS	——	
②	Cover	——	1	SUS	White	——
①	Keystoke	——	1	Nylon	Black	——

APPROVALS		DATE	HRO韩荣® ELECTRONICS CO.,LTD		
DRAWN	J.X.Zhang	2013/8/6			
CHECKED			TITLE:	MULTIFUNCTIONAL SWITCHS	
APPROVALS			PART NO.	K1-1519SA-01	
TOLERANCES ARE	30~以上 ±0.30; 10~30 ±0.20; 5~10 ±0.15; ~5 ±0.10	ANGLE ±2°	UNIT: mm	SCALE: 1:1	PROJ:
			DRAWING NO.	——	SHEET 1 OF 1

ECN NO.	REV.	DATE.	DESCRIPTION.	CHANGE.	CHECK.	APPRO.
——	A	——	NEW	——	——	——