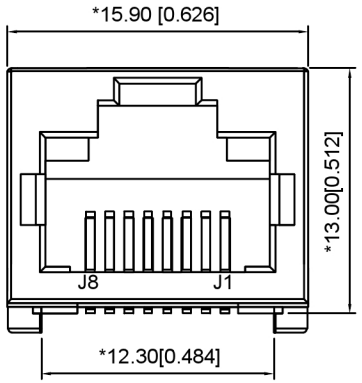

FRONT VIEW

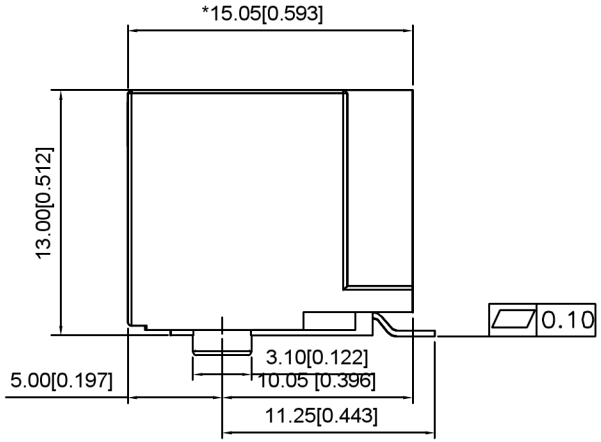

RIGHT SIDE VIEW

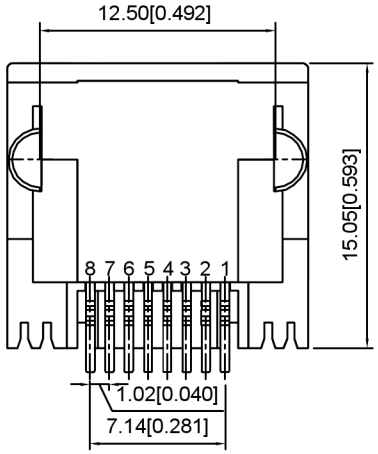

BOTTOM VIEW

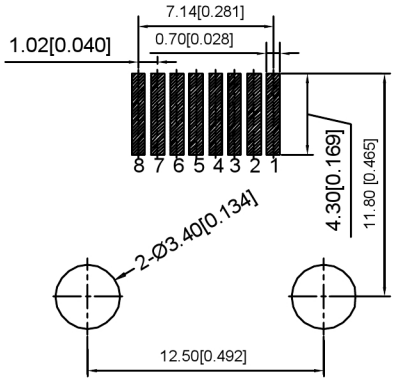

RECOMMENDED PCB LAYOUT
VIEWED FROM COMPONENT SIDE

MATERIAL 材料:
- HOUSING 外壳: LCP,UL94V-0,BLACK.
- TERMINAL 端子: PHOSPHOR BRONZE T=0.35MM, GOLD PLATING

MECHANICAL 机械:
- DURABILITY 耐用性: 750 CYCLES MIN,12.5MM/MINUTE.
- INSERTION FORCE 插入力:2.2KG.F MAX
- RETENTION STRENGTH 保持力:7.7KG.F BETWEEN JACK AND PLUG.
- OPERATING TEMPERATURE 工作温度: -40°C~+85°C.
- STORAGE TEMPERATURE 储存温度: -40°C~+85°C.
- ALL CRITICAL DIMENSIONS WITH "*"

ELECTRICAL电气:
- VOLTAGE 电压: 125 VOLTS AC.
- CURRENT RATING 电流额定值: 1.5AMP.
- DIELECTRIC STRENGTH 介电强度: 1000 VAC RMS 50HZ OR 60HZ,1 MIN
- INSULATION RESISTANCE 绝缘电阻: 500 MEGA OHMS MIN.INITIAL AFTER 500V DC FOR 1 MINUTE.
- CONTACT RESISTANCE 接触电阻:SINGLE TERMINAL 30 MILLIOHMS MAX. INITIAL 50 MILLIOHMS MAX. AFTER DURABILITY TEST.

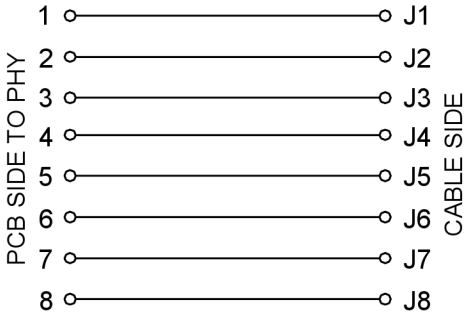

广东星坤科技股份有限公司
生效 日期
文件工程章

MARK	DESCRIPTION	DATE	REVISED	APPROVED
ΔX				
ΔX				
ΔX				

REVISIONS

ANGLAR	±5°
L≤ 4	±0.2
4<L≤ 16	±0.3
16<L≤ 63	±0.4
L> 63	±0.5

UNSPECIFIED TOLERANCES

www.helloxkb.com www.helloxkb.cn www.xk-dg.cn

XKB INDUSTRIAL PRECISION CO.,LIMITED

DSND		SCALE: N/A	MODEL TYPE: RJ JACK
DWN		VIEW:	PART NO.:
CHKD		UNIT: mm/in	DWG NO.: X12ADIWA6SB1133
APPD		SIZE: A4	

WEIGHT	SHEET	REVISIOI
	1/1	A0